Panex Moulded Knob Stud Kit

- Quick and easy to assemble
- Quarter turn to lock/unlock
- Stud captive in panel - cannot be lost
- Hand operated - easy grip
- Positive lock feature
- Steel, zinc plate, chromate passivation
- Each kit contains: slip on receptacle, rivet plate, plastic retainer and knob stud

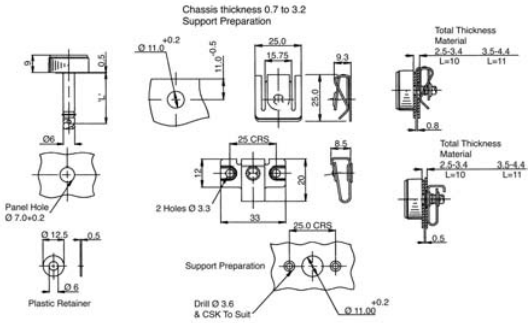

FAS58

Order Multiple=5		Price Each
Stud Length	Order Code	
10	706-8748	
11	706-8750	

Downloaded from Elcodis.com electronic components distributor