TOGGLE HAND PRESS

MODEL **P1200PR** 714-8793

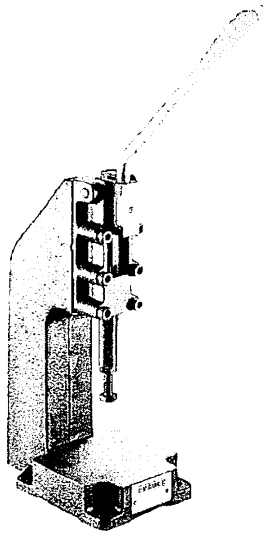

With 15 daN handle force the output force is:

	daN
Fully retracted	705
5 mm extended	167
10 mm "	90
15 mm "	73
20 mm "	70
25 mm "	72
30 mm "	85
35 mm "	100
40 mm "	110
45 mm "	150
48 mm "	220
49 mm "	290
Fully extended	930

Type:
Bench mounted manual toggle press.

Nominal holding force:
1200 daN.

Weight:
7.35 kg.

Quality Features:

- S.G. Iron framecasting.
- precision ground steel plunger.
- fixed height work head.

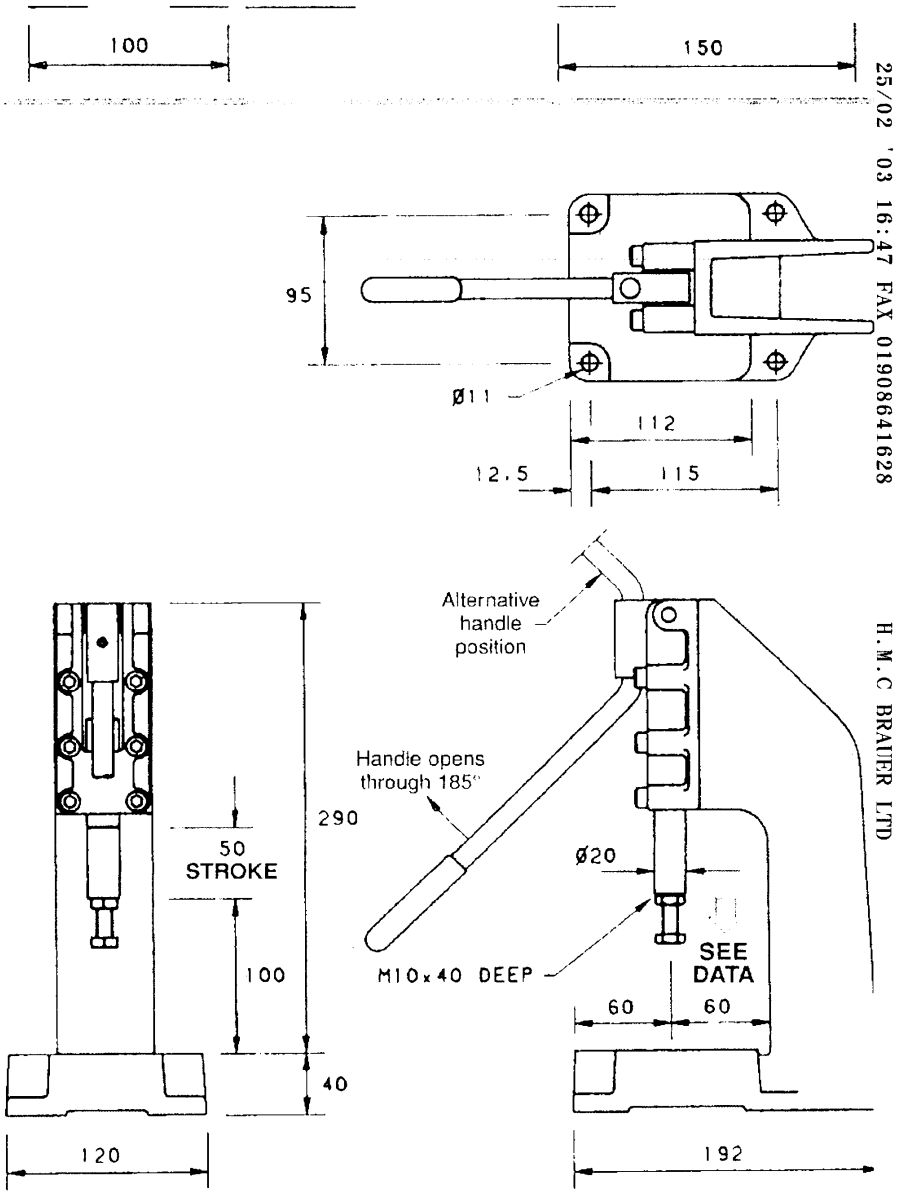

E-Mail: sales@brauer.co.uk
www.brauer.co.uk

Downloaded from Elcodis.com electronic components distributor