440-030
EMI/RFI Banding and Shrink Boot Adapter
Rotatable Coupling - Standard Profile

CONNECTOR DESIGNATORS

A-F-H-L

ROTATABLE COUPLING

440 F S 030 M 20 12-8 B P T

- Product Series
- Connector Designator
- Angle and Profile
  - H = 45°
  - J = 90°
  - S = Straight
- Basic Part No.
- Finish (Table II)
- Shell Size (Table I)
- Shrink Boot (Table IV - Omit for none)
- Polysulfide (Omit for none)
- B = Band
  K = Precoiled Band
  (Omit for none)
- Length: S only
  (1/2 inch increments,
  e.g. 8 = 4.000 inches)
- Cable Entry (Table IV)

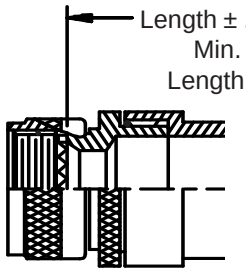

STYLE 2
(STRAIGHT
See Note 1)

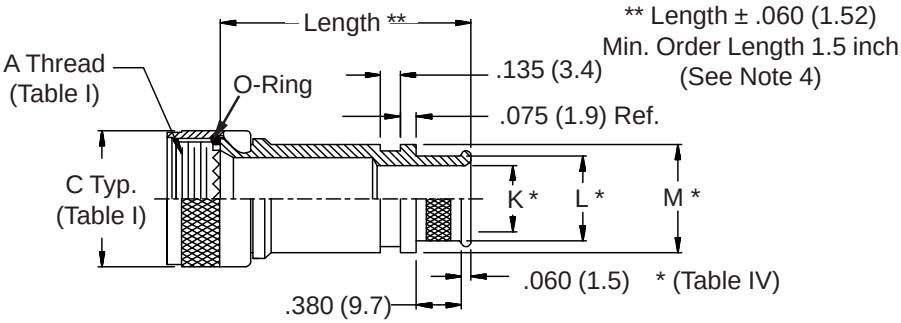

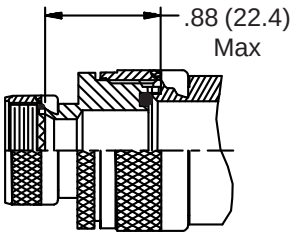

STYLE 2
(45° & 90°
See Note 1)

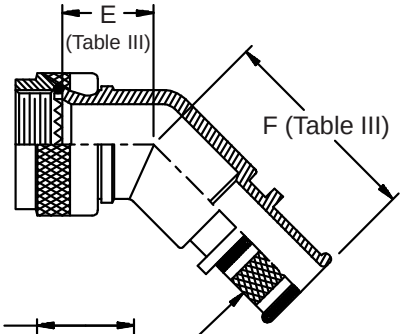

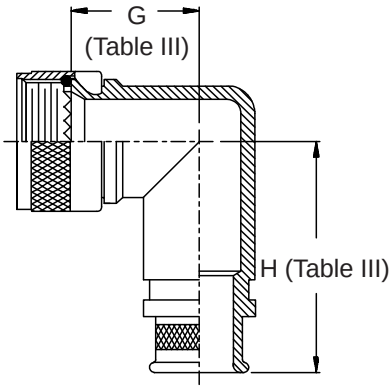

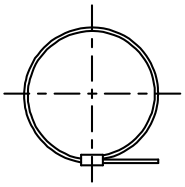

Band Option
(K Option Shown -
See Note 6)

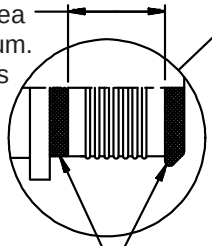

© 2005 Glenair, Inc. CAGE Code 06324 Printed in U.S.A.

Downloaded from Elcodis.com electronic components distributor

440-030
EMI/RFI Banding and Shrink Boot Adapter
Rotatable Coupling - Standard Profile

See inside back cover fold-out or pages 13 and 14 for Tables I and II.

TABLE III: ELBOW DIMENSIONS

Shell Size Conn. Desig. A-F-L	H	E * Max		F Max		G * Max		H * Max	
08	09	.531	(13.5)	.940	(23.9)	.639	(16.2)	1.110	(28.2)
10	11	.594	(15.1)	1.000	(25.4)	.664	(16.9)	1.140	(29.0)
12	13	.618	(15.7)	1.050	(26.7)	.688	(17.5)	1.160	(29.5)
14	15	.656	(16.7)	1.090	(27.7)	.705	(17.9)	1.190	(30.2)
16	17	.688	(17.5)	1.150	(29.2)	.732	(18.6)	1.210	(30.7)
18	19	.748	(19.0)	1.190	(30.2)	.803	(20.4)	1.221	(31.0)
20	21	.773	(19.6)	1.250	(31.8)	1.031	(26.2)	1.281	(32.5)
22	23	.800	(20.3)	1.320	(33.5)	1.156	(29.4)	1.351	(34.3)
24	25	.823	(20.9)	1.380	(35.1)	1.219	(31.0)	1.410	(35.8)
28		1.041	(26.4)	1.500	(38.1)	1.281	(32.5)	1.531	(38.9)
32		1.092	(27.7)	1.620	(41.1)	1.593	(40.5)	1.651	(41.9)
36		1.136	(28.9)	1.750	(44.5)	1.718	(43.6)	1.781	(45.2)

*These maximum dimensions are increased by .187 (4.7) when parts are fabricated from stainless steel, and connector designator is "S".

TABLE IV: CABLE ENTRY

Dash No.	K		L		M		Shrink Boot
01	.125	(3.2)	.250	(6.4)	.312	(7.9)	770-003S111
31	.188	(4.8)	.312	(7.9)	.374	(9.5)	770-003S111
02	.250	(6.4)	.375	(9.5)	.437	(11.1)	770-003S112
32	.312	(7.9)	.438	(11.1)	.500	(12.7)	770-003S112
03	.375	(9.5)	.500	(12.7)	.562	(14.3)	770-003S112
33	.438	(11.1)	.562	(14.3)	.624	(15.8)	770-001S104
04	.500	(12.7)	.625	(15.9)	.687	(17.4)	770-001S104
34	.562	(14.3)	.688	(17.5)	.750	(19.1)	770-001S104
05	.625	(15.9)	.750	(19.1)	.812	(20.6)	770-001S104
35	.688	(17.5)	.812	(20.6)	.874	(22.2)	770-001S104
06	.750	(19.1)	.875	(22.2)	.937	(23.8)	770-001S105
36	.812	(20.6)	.938	(23.8)	1.000	(25.4)	770-001S105
07	.875	(22.2)	1.000	(25.4)	1.062	(27.0)	770-001S105
37	.938	(23.8)	1.062	(27.0)	1.124	(28.5)	770-001S105
08	1.000	(25.4)	1.125	(28.6)	1.187	(30.1)	770-001S106
38	1.062	(27.0)	1.188	(30.2)	1.250	(31.8)	770-001S106
09	1.125	(28.6)	1.250	(31.8)	1.312	(33.3)	770-001S107
10	1.250	(31.8)	1.375	(34.9)	1.437	(36.5)	770-001S107
11	1.375	(34.9)	1.500	(38.1)	1.562	(39.7)	770-001S107
12	1.500	(38.1)	1.625	(41.3)	1.687	(42.8)	770-001S107
13	1.625	(41.3)	1.750	(44.5)	1.812	(46.0)	770-001S108
14	1.750	(44.5)	1.875	(47.6)	1.937	(49.2)	770-001S108
15	1.875	(47.6)	2.000	(50.8)	2.062	(52.4)	770-001S109
16	2.000	(50.8)	2.125	(54.0)	2.187	(55.5)	770-001S109

1. When maximum cable entry (page 21) is exceeded, Style 2 will be supplied. Dimensions E, F, G, and H will not apply. Please consult factory.
2. Metric dimensions (mm) are indicated in parentheses.
3. Interface O-Ring not supplied with Connector Designator A.
4. Consult factory for shorter lengths on straight backshells.
5. See page 40 Shrink Boot Reference Information.
6. Backshells supplied with 600-052-* band, see Glenair Series 600 Tool Catalog for installation.

-445 Now Available with the "NESTOR"
Add "-445" to Specify Glenair's Non-Detent, Spring-Loaded, Self-Locking Coupling. See Page 41 for Details.

© 2005 Glenair, Inc. CAGE Code 06324 Printed in U.S.A.

Downloaded from Elcodis.com electronic components distributor