OBSOLETE
DATE 2006

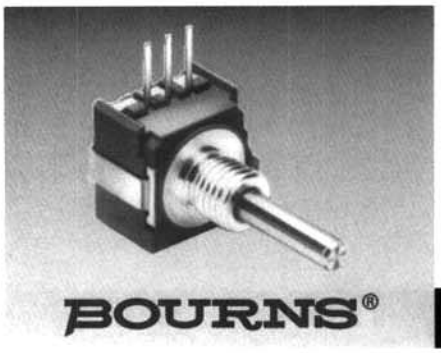

BOURNS®

Features

- Conductive plastic or cermet
- Linear and audio tapers
- PC board and bushing mount
- Gangable
- Metal bushing and shaft
- Sealed for board washing

51/52/53 - Sealed 1/2 " (12.5 mm) Square Control

Electrical Characteristics[1]	Conductive Plastic	Cermet
Standard Resistance Range		
Linear	1 K ohms to 1 megohm	150 ohms to 1 megohm
Audio	1 K ohms to 1 megohm	1 K ohms to 1 megohm
Total Resistance Tolerance		
Linear Tapers	±10 % or ±20 %	±10 % or ±5 %
Audio Tapers	±10 % or ±20 %	±10 %
Independent Linearity	±5 %	±5 %
Absolute Minimum Resistance	2 ohms maximum	2 ohms maximum
Effective Electrical Angle	270 ° ±5 °	270 ° ±5 °
Contact Resistance Variation	2 %	2 %
Dielectric Withstanding Voltage (MIL-STD-202 – Method 301)		
Sea Level	1,500 VAC minimum	1,500 VAC minimum
70,000	500 VAC minimum	500 VAC minimum
Insulation Resistance	1,000 megohms minimum	1,000 megohms minimum
Power Rating At 70 °C (Derate To 0 At 125 °C)		
(Voltage Limited By Power Dissipation or 350 VAC, Whichever Is Less)		
Linear Tapers	0.5 watt	1.0 watt
Audio Tapers	0.25 watt	0.5 watt
Theoretical Resolution	Essentially infinite	Essentially infinite
Tracking (Multiple Sections)	3 db	3 db
Environmental Characteristics[1]		
Operating Temperature Range	+1 °C to +125 °C	+1 °C to +125 °C
Storage Temperature Range	-55 °C to +125 °C	-55 °C to +125 °C
Temperature Coefficient Over Storage Temperature Range	±1,000 ppm/°C	±150 ppm/°C
Vibration (Single Section)	15 G	15 G
Total Resistance Shift	±2 % maximum	±2 % maximum
Voltage Ratio Shift	±5 % maximum	±5 % maximum
Shock (Single Section)	30 G	30 G
Total Resistance Shift	+2 % maximum	±2 % maximum
Voltage Ratio Shift	±5 % maximum	±5 % maximum
Load Life	1,000 hours	1,000 hours
Total Resistance Shift	±10 % TRS maximum	±5 % TRS maximum
Rotational Life (No Load)	50,000 cycles	25,000 cycles
Total Resistance Shift	±10 % TRS maximum	±10 % TRS maximum
Contact Resistance Variation @ 25,000 Cycles	±2 %	±4 %
Moisture Resistance (MIL-STD-303, Method 103, Condition B)		
Total Resistance Shift	±10 % TRS	±5 % TRS
IP Rating	IP 64	IP 64

Mechanical Characteristics	
Stop Strength	56 N-cm (5 lb.-in.)
Mechanical Angle	290 ° ±5 °
Torque	
Starting (All Sections)	Running torque +0.35 N-cm (+0.5 oz.-in.) maximum
Running (Single Section)	0.15 to 1.4 N-cm (0.2 to 2.0 oz.-in.)
Running (Dual or Triple Section)	0.35 to 1.8 N-cm (0.5 to 2.5 oz.-in.)
Mounting (Torque on Bushing)	1.7 to 2.0 N-m (15 to 18 lb.-in.) maximum
Weight (Single Section)	5.5 grams
(Each Additional Section)	3.0 grams
Terminals	PC pin or solder lug
Soldering Condition	Recommended hand soldering using Sn95/Ag5 no clean solder, 0.025 " wire diameter. Maximum temperature 399 °C (750 °F) for 3 seconds. No wash process to be used with no clean flux. Part can be wave soldered at 260 °C (500 °F) for 5 seconds, no wash process with no clean flux.
Marking	Manufacturer's trademark, part number, resistance value and date code.
Ganging (Multiple Section Potentiometers)	6 cups maximum
Hardware	One lockwasher and one mounting nut is shipped with each potentiometer, except where noted in the part number.

[1]At room ambient: +25 °C nominal and 50 % relative humidity nominal, except as noted.

Specifications are subject to change without notice.

Downloaded from Elcodis.com electronic components distributor

OBSOLETE
DATE 2006

51/52/53 - Sealed 1/2 " (12.5 mm) Square Control

BOURNS®

Product Dimensions

PACKAGE DIMENSIONS

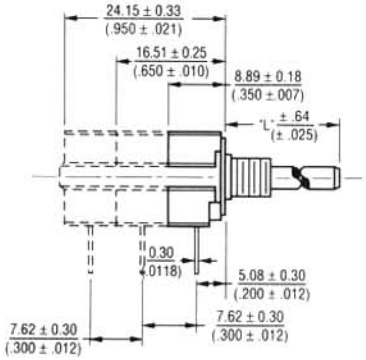

(SINGLE, DUAL AND TRIPLE MODULE SHOWN)
AVAILABLE IN 1 THROUGH 6 MODULE VERSIONS.

MODEL 51

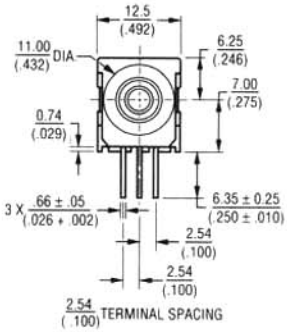

MODEL 52

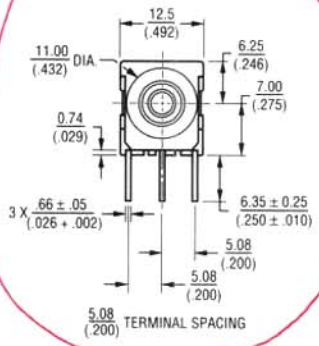

PACKAGE DIMENSIONS PCB MOUNTING BRACKET

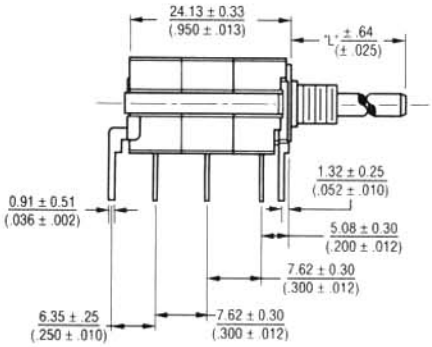

AVAILABLE IN 1 THROUGH 6 MODULE VERSIONS.

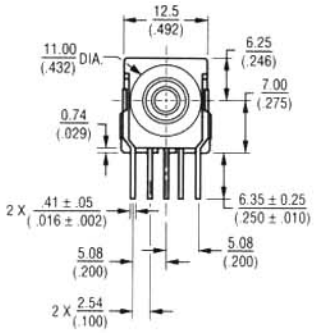

SOLDER LUG TERMINALS MODEL 53

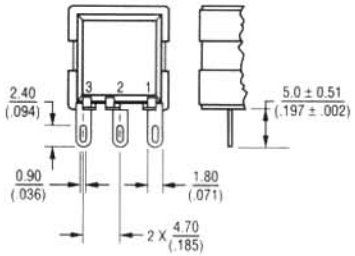

ELECTRICAL SCHEMATIC

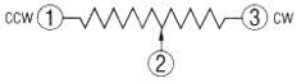

ANTI-ROTATION LUG
(Style "A", 90 ° CW Shown)

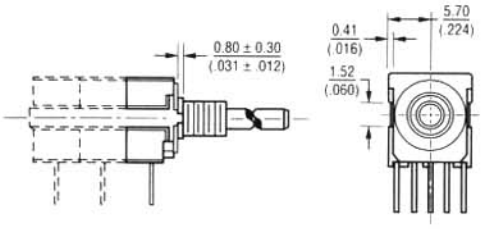

DIMENSIONS ARE: MM / (INCHES)

SHAFT FLAT ORIENTATION

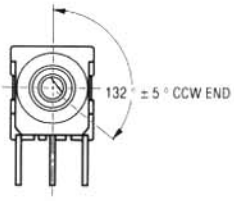

SUGGESTED PANEL LAYOUTS

The Model 50 can be used with either of the two panel layouts shown below.

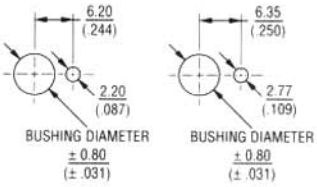

FOR TOLERANCES SHOWN: .XX = ± .25 (.010)
.XXX = ± .13 (.005)
SHAFT DIMENSIONS ± .80 (1/32)

Specifications are subject to change without notice.

Downloaded from Elcodis.com electronic components distributor

OBSOLETE
DATE 2006

51/52/53 - Sealed 1/2 " (12.5 mm) Square Control

BOURNS®

Shaft/Bushing Styles

A Style Bushing

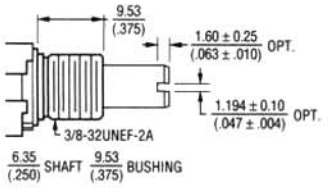

STD. LENGTH 'L'	
.500	(12.7)
.625	(15.88)
.750	(19.05)
.875	(22.23)
1.000	(25.4)

C Style Bushing

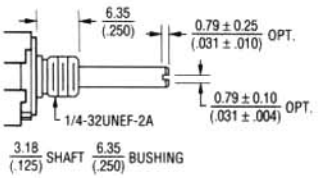

STD. LENGTH 'L'	
.375	(9.53)
.500	(12.7)
.625	(15.88)
.750	(19.05)
.875	(22.23)
1.000	(25.4)

A Style Bushing - Flatted Shaft

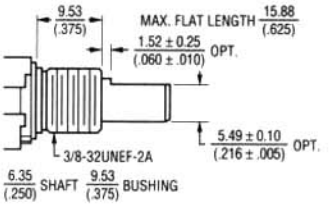

STD. LENGTH 'L'	
.625	(15.88)
.750	(19.05)
.875	(22.23)
1.000	(25.4)

F Style Bushing

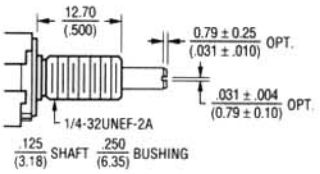

STD. LENGTH 'L'	
.625	(15.88)
.750	(19.05)
.875	(22.23)
1.000	(25.4)

S Style Bushing

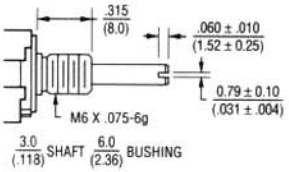

STD. LENGTH 'L'	
.394	(10.0)
.512	(13.0)
.630	(16.0)
.866	(22.0)
.984	(25.0)

U Style Bushing

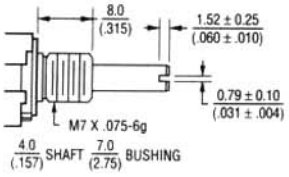

STD. LENGTH 'L'	
.394	(10.0)
.512	(13.0)
.630	(16.0)
.866	(22.0)
.984	(25.0)

R Style Bushing

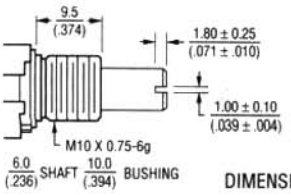

STD. LENGTH 'L'	
.512	(13.0)
.630	(16.0)
.866	(22.0)
.984	(25.0)

DIMENSIONS ARE: MM / (INCHES)

How To Order

51	A	A	D	-	B	28	-	A	15

MOUNTING BRACKET/ ANTI-ROTATION LUG

Code	Description
A	**AR Lug 90 °CW**
C	AR Lug 270 °CW
D	**No AR Lug or Bracket**
L	Front Bracket
M	Rear Bracket
N	Front and Rear Bracket

 # SECTIONS/DETENTS

Code	Description
A	**Single No Detent**
B	Double No Detent
C	Triple No Detent
D	Quad No Detent
E	Single w/Center Detent
F	Double w/Center Detent
G	Triple w/Center Detent
H	Quad w/Center Detent
J	Five Section
K	Six Section
L	Five Section w/Detent
M	Six Section w/Detent

BUSHING CONFIGURATION

Code	Description
A	**3/8 "D x 3/8 "L**
C	**1/4 "D x 1/4 "L**
F	1/4 "D x 1/2 "L
R	**10 mmD x 9.5 mmL**
S	**6 mmD x 8 mmL**
U	**7 mmD x 8 mmL**

MODEL

Code	Description
51	**PC Pins (.100 " centers)**
52	PC Pins (.200 " centers)
53	**Solder Lugs**

ELEMENT TAPER TYPE/TOLERANCE / **RESISTANCE (CODE)**

Code	Description	VALUE IN OHMS	
(A)	**Linear Cermet ±10 %**	(28) — 150	(14) — 7.5 K
(H)	Linear Cermet ±5 %	(06) — 200	**(15) — 10 K**
		(07) — 250	(30) — 15 K
		(08) — 500	(16) — 20 K
		(09) — 750	(17) — 25 K
		(10) — 1 K	**(18) — 50 K**
		(29) — 1.5 K	(19) — 75 K
		(11) — 2 K	**(20) — 100 K**
		(12) — 2.5 K	(23) — 500 K
		(13) — 5 K	(25) — 1 M
(B)	**Linear C-P ±20 %**	**(10) — 1 K**	**(18) — 50 K**
(E)	Linear C-P ±10 %	(12) — 2.5 K	**(20) — 100 K**
		(13) — 5 K	(22) — 250 K
		(15) — 10 K	(23) — 500 K
		(16) — 20 K	(25) — 1 M
		(17) — 25 K	
(C)	CW Audio Cermet ±10 %	(10) — 1 K	(18) — 50 K
		(12) — 2.5 K	(20) — 100 K
(F)	CCW Audio Cermet ±10 %	(13) — 5 K	(23) — 500 K
		(15) — 10 K	(25) — 1 M
		(17) — 25 K	
(D)	**CW Audio C-P ±20 %**	**(10) — 1 K**	**(18) — 50 K**
(S)	CW Audio C-P ±10 %	(12) — 2.5 K	**(20) — 100 K**
		(13) — 5 K	(22) — 250 K
		(15) — 10 K	(23) — 500 K
		(17) — 25 K	(25) — 1 M
(G)	CCW Audio C-P ±20 %	(10) — 1 K	(18) — 50 K
		(12) — 2.5 K	(20) — 100 K
(T)	CCW Audio C-P ±10 %	(13) — 5 K	(22) — 250 K
		(15) — 10 K	(23) — 500 K
		(17) — 25 K	(25) — 1 M
(Y)	CW Dual Audio Taper C-P ±20 %	(10) — 1 K	(18) — 50 K
		(12) — 2.5 K	(20) — 100 K
		(13) — 5 K	(22) — 250 K
		(15) — 10 K	(23) — 500 K
		(17) — 25 K	(25) — 1 M

SHAFT TYPE / **AVAILABLE ONLY IN BUSHINGS** / **AVAILABLE ONLY IN LENGTHS**

Code	Description	Code	Description
A	Single Plain 1/4 "D	A	20,24,28,32
B	**Single Slotted 1/4 "D**	**A**	12,16,20,**24,28**,32
C	Single Flatted 1/4 "D	A	20,24,28,32
D	Single Plain 1/8 "D	C, F	16,20,24,28,32
E	**Single Slotted 1/8 "D**	**C, F**	12,16,20,**24,28**,32
R	**Single Slotted 6 mmD**	**R**	10,13,16,22,**25**
T	**Single Slotted 4 mmD**	**U**	10,13,16,22,**25**
U	**Single Slotted 3 mmD**	**S**	10,13,**16**,22,25

SHAFT LENGTH (FMS) / **AVAILABLE ONLY IN BUSHING**

Code	Description	Code
12	3/8 "	B, C
16	1/2 "	A, C
20	5/8 "	A, C, F
24	**3/4 "**	**A, C, F**
28	**7/8 "**	**A, C, F**
32	1 "	A, C, F
	Metric	
10	10 mm	R, S, U, T
13	13 mm	R, S, U, T
16	**16 mm**	**R, S, U, T**
22	22 mm	R, S, U, T
25	**25 mm**	**R, S, U, T**

Boldface features are Bourns standard options. All others are available with higher minimum order quantities.

REV. 04/03

Specifications are subject to change without notice.

Downloaded from Elcodis.com electronic components distributor