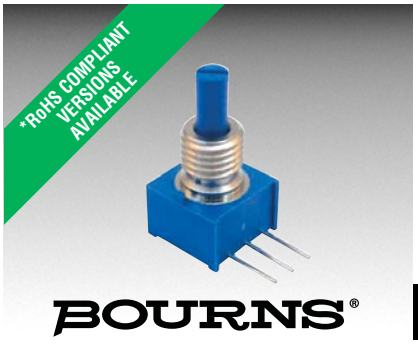

Features

- Conductive plastic
- PC board and bushing mount
- Plastic or metal bushing and plastic shaft
- Withstands typical industrial washing processes
- Compact package saves board and panel space

BOURNS® PRO AUDIO™

3310 - 9 mm Square Sealed Panel Control

Electrical Characteristics

Standard Resistance Range - Linear ..... 1 K ohms to 1 megohm
Total Resistance Tolerance - Linear Tapers ..... ±20 %
Independent Linearity ..... ±5 %
Absolute Minimum Resistance ..... 2 ohms maximum
Effective Electrical Angle ..... 270 ° ±15 °
Contact Resistance Variation ..... 1 % or 1 ohm (whichever is greater)
Dielectric Withstanding Voltage (MIL-STD-202 – Method 301)
  Sea Level ..... 900 VAC minimum
  70,000 Feet ..... 350 VAC minimum
Insulation Resistance ..... 1,000 megohms minimum
Power Rating @ 70 °C (Derate to 0 at 125 °C - Voltage Limited By Power Dissipation or 200 VAC, Whichever is Less) ..... 0.25 watts
Theoretical Resolution ..... Essentially infinite

Environmental Characteristics

Operating Temperature Range ..... -40 °C to +125 °C (-40 °F to +257 °F)
Storage Temperature Range ..... -55 °C to +125 °C (-67 °F to +257 °F)
Temperature Coefficient Over Storage Temperature Range ..... ±1,000 ppm/°C
Vibration ..... 30 G
  Total Resistance Shift ..... ±1 % maximum
  Voltage Ratio Shift ..... ±1 % maximum
Shock ..... 100 G
  Total Resistance Shift ..... ±1 % maximum
  Voltage Ratio Shift ..... ±1 % maximum
Load Life ..... 1,000 hours
  Total Resistance Shift ..... ±10 % TRS maximum
Rotational Life (No Load) ..... 50,000 cycles
  Total Resistance Shift ..... ±5 % TRS maximum
  Contact Resistance Variation ..... 3 % or 3 ohms, whichever is greater
Moisture Resistance ..... MIL-STD-202, Method 103, Condition B
  Total Resistance Shift ..... ±10 % TRS maximum
IP Rating IP67

Mechanical Characteristics

Stop Strength ..... 5.65 N-cm (8 oz.-in.)
Mechanical Angle ..... 300 ° nominal
Torque
  Starting ..... 3.53 N-cm (5.0 oz.-in.) maximum
  Running ..... 3.53 N-cm (5.0 oz.-in.) maximum
  Mounting (Torque on Bushing) ..... 45 N-cm (4.0 lb.-in.) max [plastic bushing]; 79 N-cm (7.0 lb.-in.) max [metal bushing]
Weight (Single Section) ..... 4.5 grams
  (Each Additional Section) ..... 2.5 grams
Terminals ..... Solderable pins
  Soldering Condition
    Manual Soldering ..... 96.5Sn/3.0Ag/0.5Cu solid wire or no-clean rosin cored wire; 370 °C (700 °F) max. for 3 seconds
    Wave Soldering ..... 96.5Sn/3.0Ag/0.5Cu solder with no-clean flux; 260 °C (500 °F) max. for 5 seconds
    Wash Processes ..... For recommended wash processes, please refer to http://www.bourns.com/pdfs/sldclen.pdf
Marking ..... Manufacturer's trademark, model number, product code, terminal style, resistance code and date code
Ganging ..... 2 cups maximum
Hardware ..... One lockwasher and one mounting nut is shipped with each potentiometer, except where noted in the part number.
Flammability ..... Conforms to UL94V-0
Epoxy ..... Conforms to UL 94V-1
IP Rating IP67

Switch Characteristics

Contact Resistance ..... 2 ohms max.
Dielectric Strength ..... 350 VDC
Detent Torque ..... 0.5 oz-in min.
Power Rating (Resistive Load) ..... 100 mA @ 16 VDC

*RoHS Directive 2002/95/EC Jan 27 2003 including Annex
Specifications are subject to change without notice.
Customers should verify actual device performance in their specific applications.

Downloaded from Elcodis.com electronic components distributor

Additional Features

- Audio taper versions available as special order
- RoHS compliant versions available*

3310 - 9 mm Square Sealed Panel Control

BOURNS®

Standard Resistance Table

Resistance (Ohms)	Resistance Code
1,000	**102**
2,000	**202**
5,000	**502**
10,000	**103**
20,000	**203**
50,000	503
100,000	104
200,000	204
500,000	504
1,000,000	105

Popular values listed in boldface. Consult factory for special resistances.

How To Order

3310 Y - 0 0 1 - 103 L

Model Number Designator
3310 = 9 mm Panel Control

Terminal Style Designator
Single Cup:
C = In-line Straight Terminals Side Exit 2.54 mm centers
R = In-line Terminals Rear Exit 2.54 mm centers
P = 5.08 mm x 2.54 mm Triangular Pattern Rear Exit
Y = 5.08 mm x 5.08 mm Triangular Pattern Rear Exit

Dual Cup (Pot/Pot or Pot/Switch):
H = Dual In-line Straight Terminals Rear Exit 2.54 mm centers

Shaft End Designator
0 = Shaft End Slotted
1 = Shaft End Flatted

Shaft Length Designator
0 = 12.7 mm FMS Long Plastic Shaft (Available w/bushing only)
1 = 19.05 mm FMS Long Plastic Shaft (Available w/bushing only)
2 = 5.59 mm FMS Long Plastic Shaft (Bushingless version only)

Bushing Designator
Pot (or Pot/Pot):
1 = 6.35 mm x 6.35 mm Plastic
2 = 6.35 mm x 6.35 mm Ni Plated Brass
5 = Bushingless (Board Level Control)

Pot/Switch Bushing Designator (use with “H” terminal style only.)
3 = 6.35 mm x 6.35 mm Plastic
4 = 6.35 mm x 6.35 mm Ni Plated Brass
6 = Bushingless (Board Level)

Resistance Code
(1st 2 digits are significant, 3rd digit is number of 0s to follow)

RoHS Identifier
L = Compliant
Blank = Non-Compliant

Specifications are subject to change without notice.
Customers should verify actual device performance in their specific applications.

Downloaded from Elcodis.com electronic components distributor

Product Dimensions

COMMON DIMENSIONS
3310-001
Plastic Bushing
Slotted Shaft

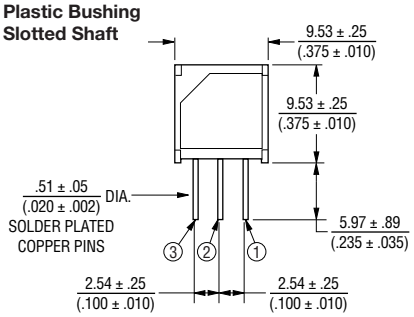

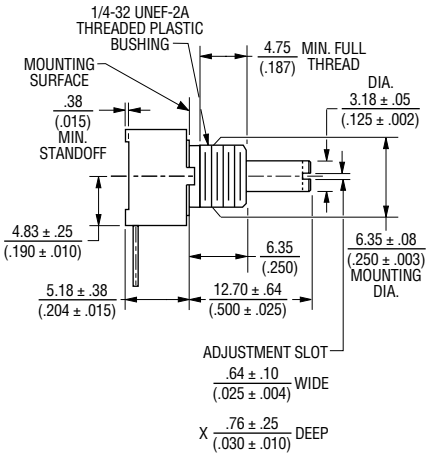

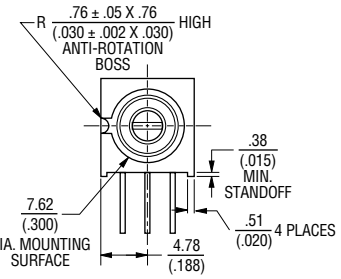

MOUNTING HOLE PATTERN

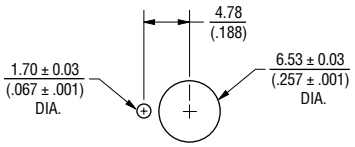

3310C-001

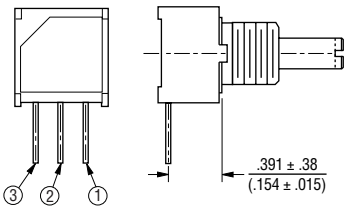

3310P-001

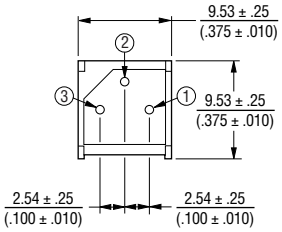

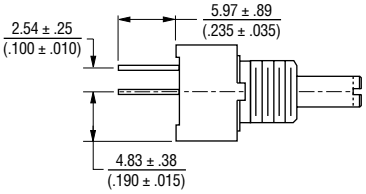

3310R-001

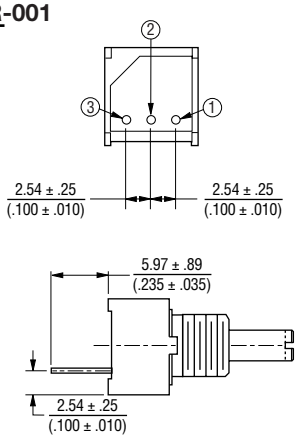

DIMENSIONS: MM / (INCHES)

3310Y-001

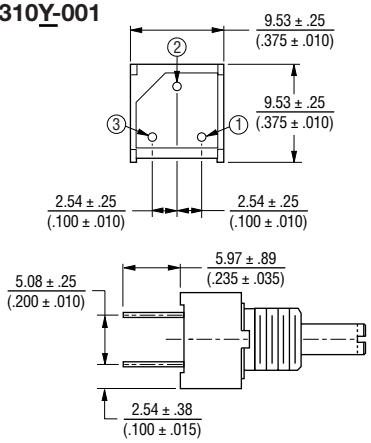

COMMON DIMENSIONS
3310C-101
Plastic Flatted Shaft

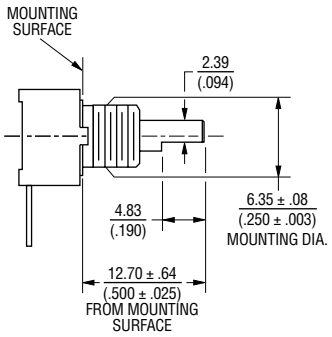

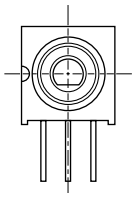

The shaft flat position as shown above is at 50 % of the mechanical travel.

Specifications are subject to change without notice.
Customers should verify actual device performance in their specific applications.

Downloaded from Elcodis.com electronic components distributor

Product Dimensions

COMMON DIMENSIONS
3310-002
Metal Bushing

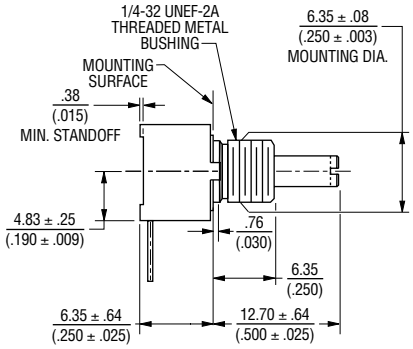

3310P-025 *
Bushingless

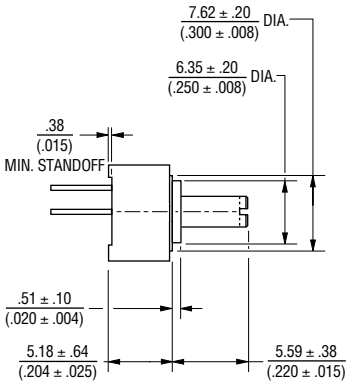

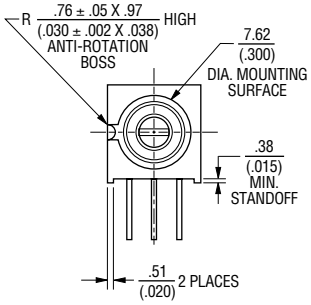

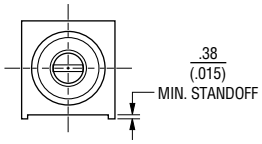

3310C-002

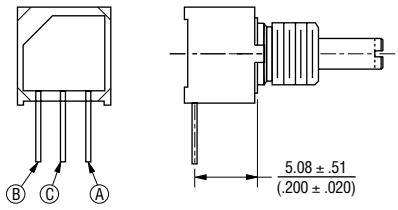

DIMENSIONS: MM (INCHES)

NOTE: * Only recommended shaft length for bushingless version

Specifications are subject to change without notice.
Customers should verify actual device performance in their specific applications.

Downloaded from Elcodis.com electronic components distributor

Product Dimensions

COMMON DIMENSIONS
3310H-003
Pot/Switch Dual Cup
Plastic Bushing

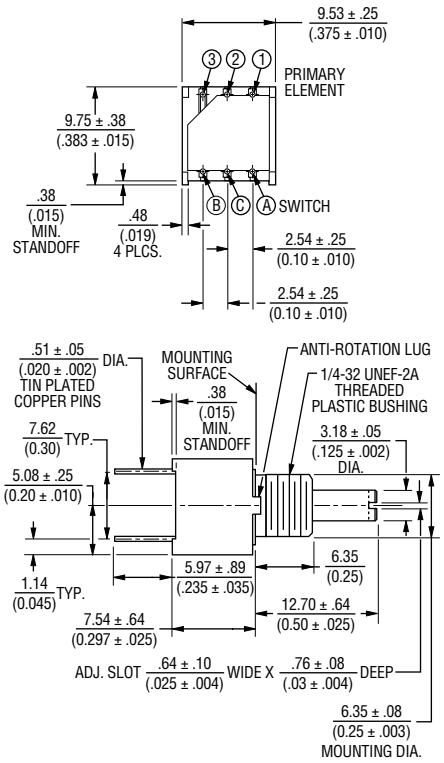

3310H-025*
Pot/Pot Dual Cup
Bushingless

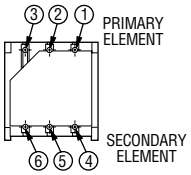

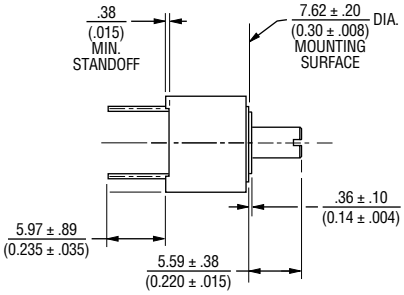

3310H-002
Pot/Pot Dual Cup
Metal Bushing

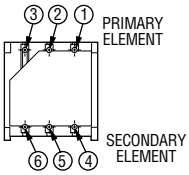

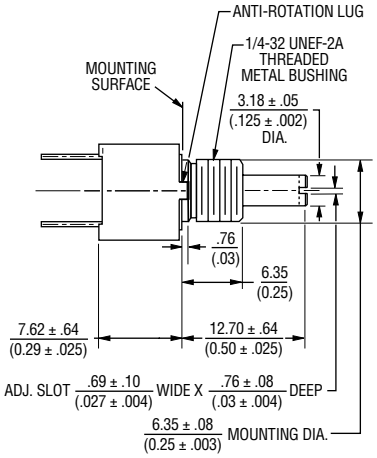

Pot/Pot Dual Cup

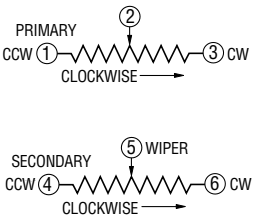

Pot/Switch Dual Cup

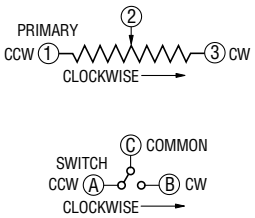

Pot Single Cup

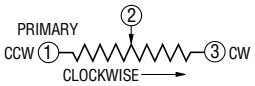

DIMENSIONS: MM / (INCHES)

NOTE: * Only recommended shaft length for bushingless version

REV. 12/10

Specifications are subject to change without notice.
Customers should verify actual device performance in their specific applications.

Downloaded from Elcodis.com electronic components distributor