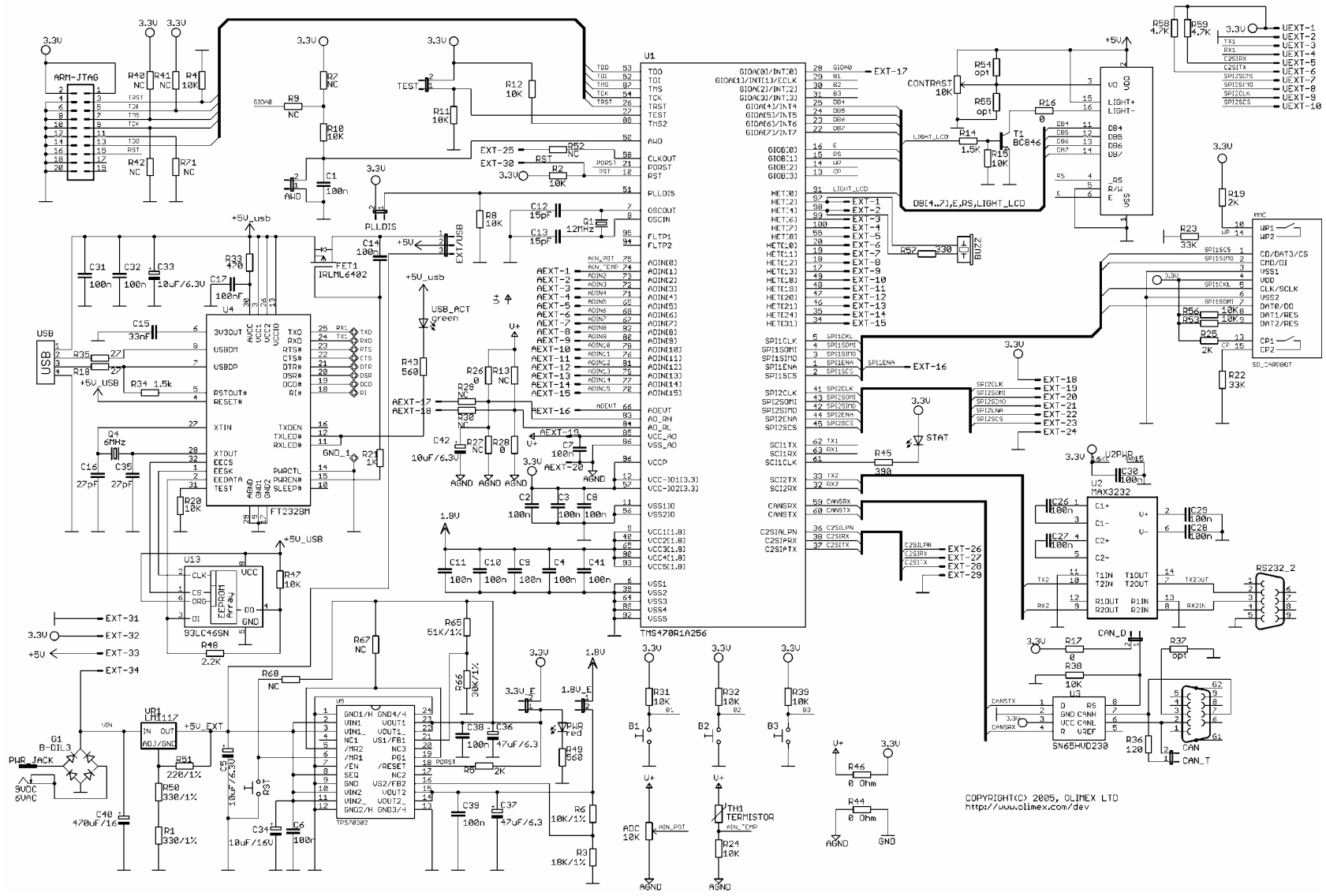

Downloaded from Elcodis.com electronic components distributor