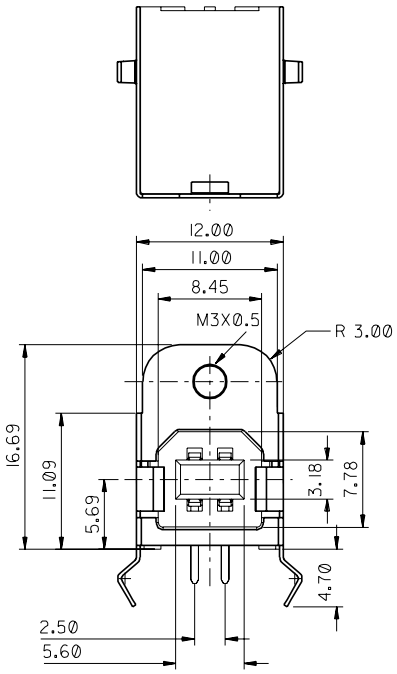

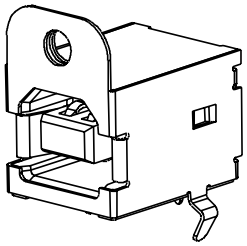

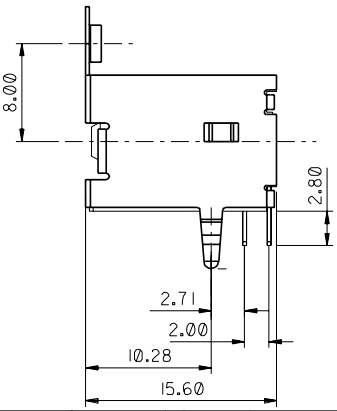

NOTES :

1. MATERIAL :
   HOUSING : POLYESTER , UL94-V0 , COLOR:(a) BLACK (b) WHITE
   TERMINAL : PHOSPHOR BRONZE
   METAL SHELL : COPPER ALLOY
2. PLATING :
   TERMINAL :
   CONTACT AREA : (a) GOLD FLASH.
   (b) GLOD (Au), THICKNESS = 30 MICROINCH/0.76 MICROMETER
   SOLDER TAIL : TIN-LEAD (Sn-Pb) ALLOY,
   THICKNESS= 150 MICROINCH /3.8 MICROMETER
   UNDER PLATE : NICKEL (Ni), THICKNESS= 50 MICROINCH/1.27 MICROMETER
   METAL SHELL :
   TIN-LEAD (Sn-Pb) ALLOY , THICKNESS= 100 MICROINCH/2.54 MICROMETER
   UNDER PLATE : NICKEL (Ni) , THICKNESS= 50 MICROINCH/1.27 MICROMETER
3. DATUM AND BASIC DIMENSIONS ESTABLISHED BY CUSTOMER
   RECOMMENDED PCB THICKNESS : 1.60±0.05
4. PRODUCT SPECIFICATION : REFER TO PS-67998-0000
5. (C) THE SCREW LOCK TORQUE IS 1.2 kgf-cm MINIMUM

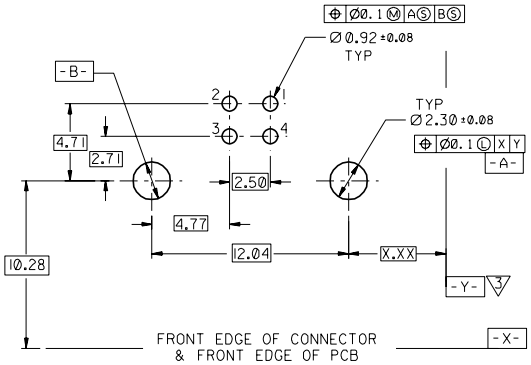

RECOMMENDED PCB LAYOUT

PART NUMBER LEGEND:

P/N	COLOR	CONTACT PLATING
67285-0000	BLACK	GOLD FLASH
67285-0001	BLACK	0.76 MICROMETER/30 MICROINCH GOLD
67285-1000	WHITE	GOLD FLASH
67285-1001	WHITE	0.76 MICROMETER/30 MICROINCH GOLD

REV	DESCRIPTION
C	ADD NOTES 5 EC NO. T2001-0115 DRWN:RICHARD HO 00129 CH'K: VINCENT APPR: MEGA LIN
B	REMOVE THE DIMENSION EC NO. T1999-0310 DRWN: SAM SHIN 990603 CH'K: VINCENT 990603 APPR: MEGA LIN 990603

QUALITY SYMBOLS: MAJOR = 0; CRITICAL (C) = 0

GENERAL TOLERANCES: (UNLESS SPECIFIED)

	mm	INCH
4 PLACES	±0.	±.
3 PLACES	±0.	±.
2 PLACES	±0.25	±.010
1 PLACE	±0.25	±.010
ANGULAR: ±3°		

DRAFT WHERE APPLICABLE MUST REMAIN WITHIN DIMENSIONS

SCALE 3:1 | DESIGN UNITS ☒mm ☐INCH | THIRD ANGLE PROJECTION | DIMENSIONS: ☐ mm/INCH ☐ INCH/mm ☐ mm ONLY | SHT 1 | REV C | REVISE ON CAD ONLY

DRAWN BY & DATE: SAM SHIN

CHECKED BY & DATE

APPROVED BY & DATE

TITLE: SALES DRAWING OF USB"B" R/A CONNECTOR WITH SCREW FLANGE

MOLEX INCORPORATED

CAD FILENAME: S6728502.s01 | MATERIAL NO.: SEE TABLE | DRAWING NO.: SD-67285-002 | SHEET NO. 1 | SIZE A3

THIS DRAWING CONTAINS INFORMATION THAT IS PROPRIETARY TO MOLEX INCORPORATED AND SHOULD NOT BE USED WITHOUT WRITTEN PERMISSION.

ENG. NO SEE TABLE | EDP NO. | SIMILAR ITEM | CADFILE NO. S6728502.s01 | DO NOT SCALE DRAWING

Downloaded from Elcodis.com electronic components distributor