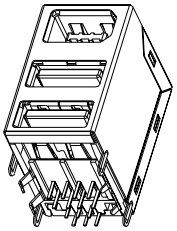

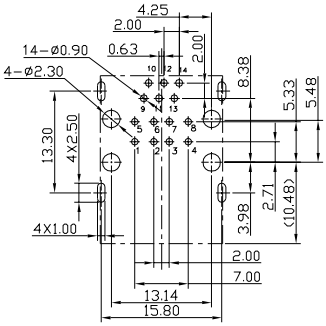

PC BOARD LAYOUT T=1.6mm
COMPONENT SIDE SHOWN TOLERANCE±0.05mm

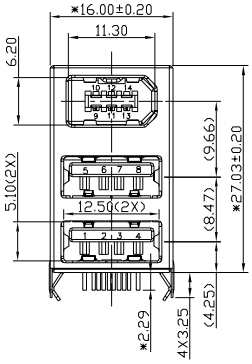

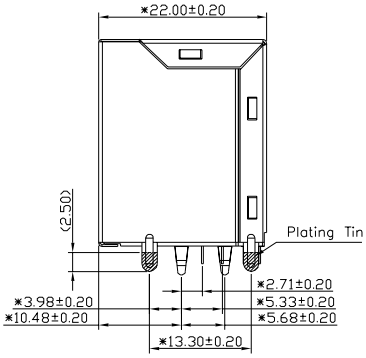

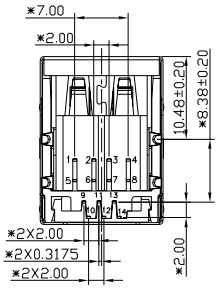

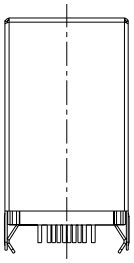

BACK VIEW

NOTES

MATERIAL:

1. USB IS BASED ON USB STANDARD SPECIFICATIONS;
   1394 IS BASED ON 1394 STANDARD SPECIFICATIONS.
2. HOUSING MATERIAL : GLASS FILLED NYLON UL94V-0
3. PLATE MATERIAL : GLASS FILLED NYLON UL94V-0
4. SHIELD MATERIAL : COPPER ALLOY(T=0.25) PLATING NIKEL.
5. CONTACT MATERIAL : USB USE STANDARD USB CONTACT.
   1394 USE PHOSPHOR BRONZE ,PLATING NICKEL OVER ALL.
   PLATING GOLD ON CONTACT AREA.

ELECTRICAL CHARACTERISTICS:

1. CONTACT CURRENT RATING:USB 1AMPERE & 1394 1.5AMPERE MAX.
2. CONTACT RESISTANCE :30 MILLIOHMS MAX.
3. DIELECTRIC WINTHSTANDING VOLTAGE:USB 750VAC MIN.
   1394 500VAC MIN.
4. INSULATION RESISTANCE : IEEE1394 100 MEGOHMS MIN
   USB 1000 MEGOHMS MIN .

MECHANICAL CHARACTERISTICS:

1. OPERATING TEMPERATURE : -40°C TO +85°C.
2. Wave Soldering Temperature: 255~265°C (5~10 SECONDS)
3. CONNECTOR MATING FORCE: 4.0Kgf MAX.
4. CONNECTOR UNMATING FORCES: 1.0Kgf TO 4.0Kgf.
5. DURABILITY: 1500 CYCLES.
6. RoHS COMPLIANT.

PART NUMBER
E828B-221A14-L

MM (INCH)
TOLERANCES EXCEPT AS NOTED
MM
.0 ± 0.2 ±
.00 ± 0.15 ±
.000 ± 0.075 ±
ANGLES ± 0.5
THIRD ANGLE PROJECTION

DETACHED LISTS

RoHS Compliant

Pulse A TECHNITROL COMPANY

TITLE IEEE1394 OVER STACKED USB RECEPTACLE CONNECTOR

DFTD Cathy
DATE 2006/09/14
SCALE : 2:1
DRAWING NO. CE823034-LA
/PART NO. SEE TABLE
DO NOT SCALE DRAWING
SIZE A3
REV 0
SHEET 1 OF 1

Downloaded from Elcodis.com electronic components distributor