THIS DRAWING IS UNPUBLISHED. RELEASED FOR PUBLICATION -.- .
© COPYRIGHT - By - ALL RIGHTS RESERVED.

| LOC | DIST |
|---|---|
| ES | 00 |

REVISIONS

| P | LTR | DESCRIPTION | DATE | DWN | APVD |
|---|---|---|---|---|---|
| | P | REVISED PER ECO-11-005033 | 28MAR11 | RK | HMR |

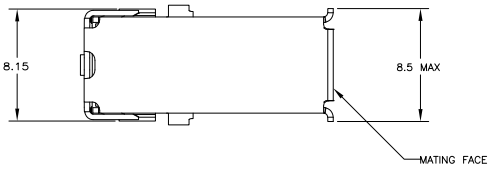


1. CONTACTS: BRASS; SHELL: PHOS BRONZE; INSERT: LCP, BLACK, UL 94V-0 RATED.
2. CONTACTS: (0.076µm MIN GOLD OVER 0.76µm MIN PALLADIUM-NICKEL) OR (0.76µm MIN GOLD) FOR A LENGTH OF 2 MIN ON MATING FACE END, 3.81µm MIN TIN FOR A LENGTH OF 3.75 MIN ON OPPOSITE END, ALL OVER 1.27µm MIN NICKEL; SHELL: 2~5µm MIN TIN.
3. COORDINATE DIMENSION APPLIES FROM CENTER OF ACTUAL FEATURE.
4. CONNECTOR SIDE OF PWB IS SHOWN.

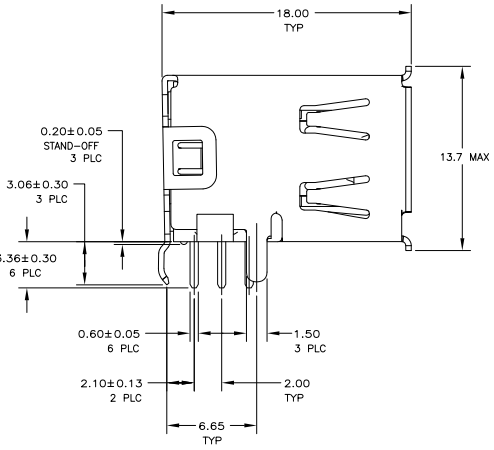


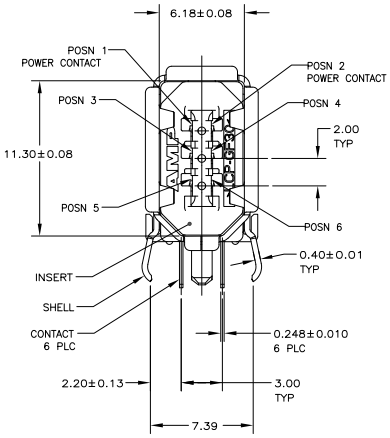


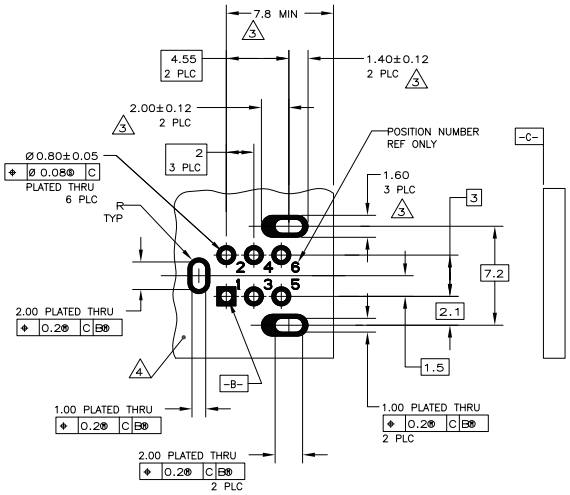


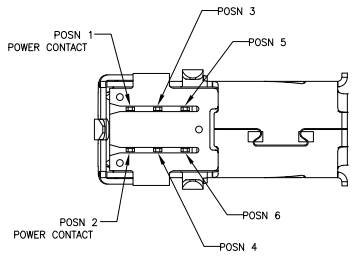


LEAD FREE

| IN TRAYS | 5787956-1 |
|---|---|
| PACKAGING | PART NO |

THIS DRAWING IS A CONTROLLED DOCUMENT.

DIMENSIONS: mm

TOLERANCES UNLESS OTHERWISE SPECIFIED:
0 PLC ± -
1 PLC ± -
2 PLC ± -
3 PLC ± -
4 PLC ± -
ANGLES ± -

MATERIAL - 1
FINISH - 2

DWN LEO ZHOU 05NOV04
CHK STEVEN YAO 05NOV04
APVD LENOMOTO 05NOV04
PRODUCT SPEC —
APPLICATION SPEC —
WEIGHT —

TE Connectivity

NAME SOCKET ASSEMBLY, FLANGED, RIGHT-ANGLE UPRIGHT, IEEE P1394 -

SIZE A2 | CAGE CODE 00779 | DRAWING NO C-5787956 | RESTRICTED TO —

CUSTOMER DRAWING | SCALE 5:1 | SHEET 1 OF 1 | REV P

1471-9 (3/11)

5787956

Downloaded from Elcodis.com electronic components distributor