THIS DRAWING IS UNPUBLISHED. RELEASED FOR PUBLICATION ,19 .
© COPYRIGHT 19 BY AMP INCORPORATED. ALL RIGHTS RESERVED.

| LOC | DIST | REVISIONS | | | | | |
|---|---|---|---|---|---|---|---|
| ES | 00 | P | LTR | DESCRIPTION | DATE | DWN | APVD |
| | | | D2 | REVISED ECR-08-018445 | 23JUL08 | A.Z. | S.Y. |

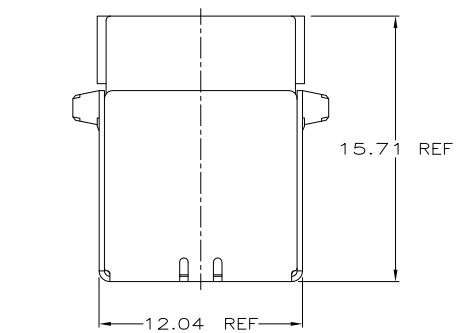


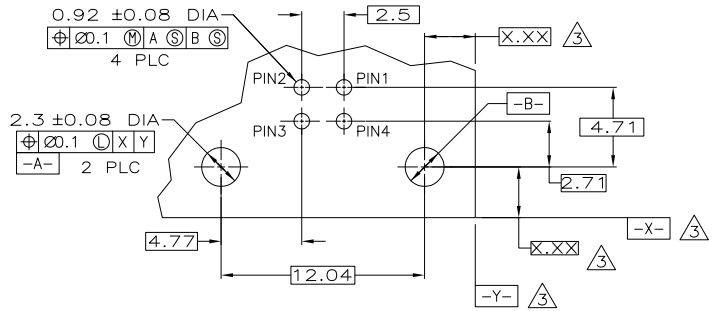


PC BOARD MOUNTING DIMENSIONS 4

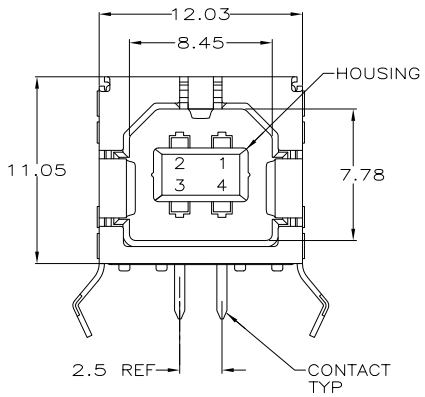


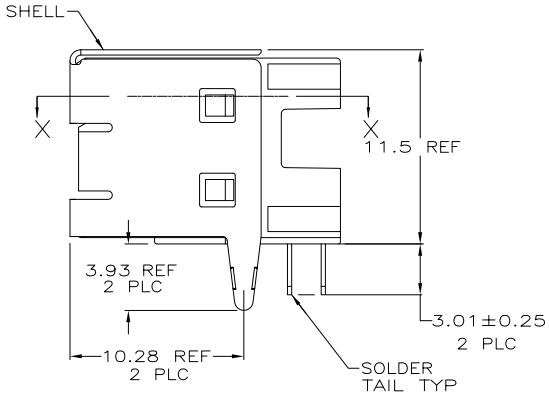


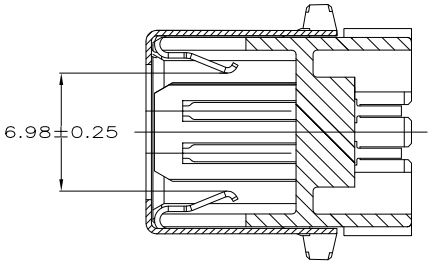


SECTION X-X

1. MATERIAL:
   SHELL & CONTACTS: COPPER ALLOY.
   HOUSING: UL 94V-0 RATED, THERMOPLASTIC, BLACK.
2. PLATING:
   CONTACTS: 0.076μm MINIMUM GOLD OVER 0.76μm MINIMUM PALLADIUM-NICKEL ON MATING AREA.
   3.8μm MINIMUM MATTE TIN ON SOLDER TAILS.
   BOTH OVER 1.27μm MINIMUM NICKEL.
   CONTACT ALTERNATE PLATING: 0.76μm MIN GOLD ON MATING AREA, 3.8μm MIN MATTE TIN ON SOLDER TAILS, BOTH OVER 1.27μm MIN NICKEL.
   SHELL: 2.0~5.0μm MINIMUM TIN.
3. DATUM AND BASIC DIMENSIONS ESTABLISHED BY CUSTOMER.
4. RECOMMENDED PC BOARD THICKNESS OF 1.57.
5. PLATING:
   CONTACTS: 0.76μm MINIMUM GOLD ON MATING AREA,
   3.8μm MINIMUM MATTE TIN ON SOLDER TAILS,
   BOTH OVER 1.27μm MINIMUM NICKEL.
   SHELL: 2.0~5.0μm MINIMUM TIN.
6. PLATING:
   CONTACTS: 0.38μm MINIMUM GOLD ON MATING AREA,
   3.8μm MINIMUM MATTE TIN ON SOLDER TAILS,
   BOTH OVER 1.27μm MINIMUM NICKEL.
   SHELL: 2.0~5.0μm MINIMUM TIN.
7. RECOMMEND:
   MATING FORCE: 35N MAX.
   UNMATING FORCE: 13N MIN.
   RECOMMENDED MATING PLUG SHOULD MEET USB2.0 STANDARD.

| PLATING | HIGH TEMPERATURE COMPATIBLE | HOUSING COLOR | PART NUMBER |
|---|---|---|---|
| 6 | NO | BLACK | 292304-5 |
| 5 | NO | BLACK | 292304-4 |
| 2 | YES | BLACK | 292304-3 |
| 2 | YES | NATURAL | 292304-2 |
| 2 | NO | BLACK | 292304-1 |

292304

THIS DRAWING IS A CONTROLLED DOCUMENT FOR AMP INCORPORATED. IT IS SUBJECT TO CHANGE AND THE CONTROLLING ENGINEERING ORGANIZATION SHOULD BE CONTACTED FOR THE LATEST REVISION.

DIMENSIONS: mm

TOLERANCES UNLESS OTHERWISE SPECIFIED:
0 PLC ±-
1 PLC ±-
2 PLC ±0.1
3 PLC ±-
4 PLC ±-
ANGLES ±-

MATERIAL 1
FINISH 2

DWN J.JIANG 23FEB04
CHK S.YAO 23FEB04
APVD T.SASAKI 23FEB04
PRODUCT SPEC —
APPLICATION SPEC —
WEIGHT —
CUSTOMER DRAWING

Tyco Electronics
Tyco electronics coporation
Shanghai, P.R.China, 200233

NAME: RECEPTACLE ASSEMBLY, RIGHT ANGLE, 4 POSITION, THRU-HOLE, TYPE B UNIVERSAL SERIAL BUS, LEAD FREE VERSION

SIZE A2 | CAGE CODE 00779 | DRAWING NO C-292304

SCALE 5:1 | SHEET 1 OF 1 | REV D2

AMP 1471-9 REV 10/93 Translated 040217,101735 (YYMMDD.HHMMSS) from Computervision, Inc., Medusa Revision 12.2.5T

Downloaded from Elcodis.com electronic components distributor