THIS DRAWING IS UNPUBLISHED. RELEASED FOR PUBLICATION -.-.-
© COPYRIGHT - - BY TYCO ELECTRONICS CORPORATION. ALL RIGHTS RESERVED.

LOC	DIST
CM	0

REVISIONS

P	LTR	DESCRIPTION	DATE	DWN	APVD
	AJ1	REVISED PER ECO-06-011101	11MAY06	KW	KW

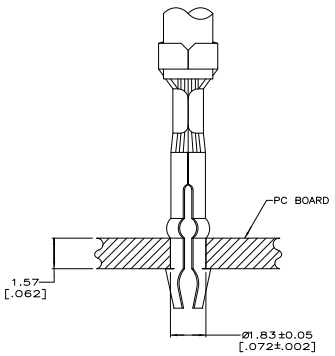

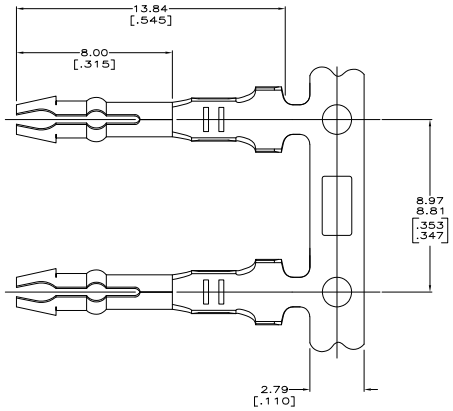

1. NOTE DELETED.
2. PARTS COMPLY WITH AMP SOLDERABILITY SPEC 109-11-3.
3. WIRE RANGE: 0.3 – 0.6 mm^2 (22 – 20 AWG).
4. INSULATION RANGE: 2.54 [.100] DIA MAX.
5. DIMENSIONS IN BRACKETS ARE IN INCHES.

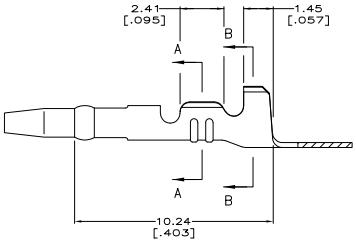

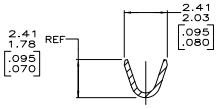

SECTION A–A

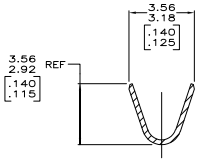

SECTION B–B

MINI	PRE TIN	0.25 [.010] BRASS	3-42642-3
MINI	PRE TIN-LEAD	0.25 [.010] BRASS	42642-3
APPLICATOR TYPE	FINISH	MATERIAL	PART NUMBER

METRIC

THIS DRAWING IS A CONTROLLED DOCUMENT.

DIMENSIONS: mm [INCHES]

TOLERANCE UNLESS OTHERWISE SPECIFIED:
0 PLC ± –
1 PLC ± –
2 PLC ± –
3 PLC ± 0.25 [.010]
4 PLC ± –
ANGLES ± –

MATERIAL: SEE TABLE
FINISH: SEE TABLE

DWN K. WHITAKER 11MAY2006
CHK K. WHITAKER 11MAY2006
APVD K. WHITAKER 11MAY2006
PRODUCT SPEC –
APPLICATION SPEC –
WEIGHT –

Tyco Electronics Corporation
Harrisburg, PA 17105-3608

NAME: TERMINAL, AMP-IN(TM)

SIZE A1 | CAGE CODE 00779 | DRAWING NO C-42642 | RESTRICTED TO –

CUSTOMER DRAWING | SCALE 10:1 | SHEET 1 OF 1 | REV AJ1

AMP 4805 REV 31MAR2000

Downloaded from Elcodis.com electronic components distributor