THIS DRAWING IS UNPUBLISHED. RELEASED FOR PUBLICATION 20
© COPYRIGHT 20 BY TYCO ELECTRONICS CORPORATION. ALL RIGHTS RESERVED.

LOC	DIST
HM	00

REVISIONS

P	LTR	DESCRIPTION	DATE	DRN	APVD
	C	REV; EC 0840-0048-99	17DEC99	GG	FL
	D	REV; ECO-08-019102	23MAR2000	GG	SJ

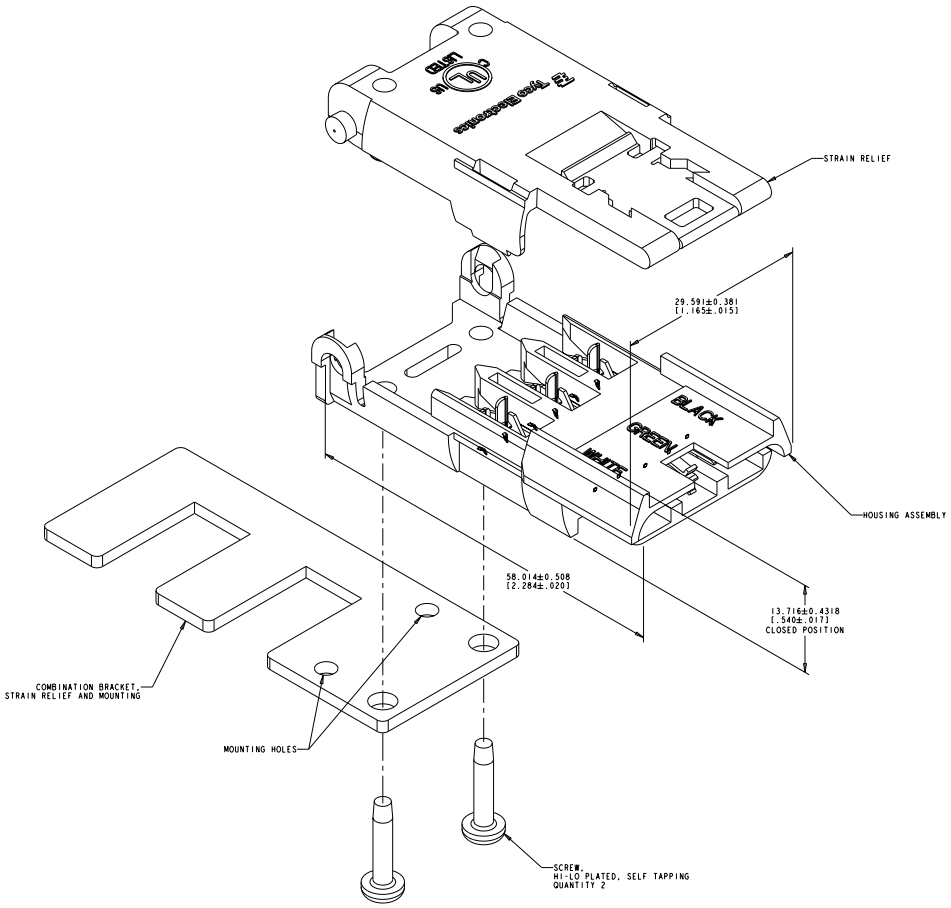

1. MATERIAL: HOUSING ASSEMBLY - CONTACTS, TIN PLATED COPPER ALLOY; HOUSING, POLYCARBONATE MOLDING COMPOUND SOFT WHITE. STRAIN RELIEF - POLYCARBONATE MOLDING COMPOUND, CLEAR. COMBO BRACKET - PREGALVANIZED CARBON STEEL.
2. WIRE RANGE AND TYPE: 12 & 14 AWG SOLID COPPER WIRE ONLY, NONMETALLIC SHEATHED CABLE.
3. CONTACTS ASSEMBLED IN HOUSING.
4. KIT PACKAGED BULK: 500 HOUSING/CONTACT ASSEMBLIES IN A POLYBAG. 500 STRAIN RELIEFS IN A POLYBAG. 500 COMBO BRACKETS IN A BAG. 1000 SCREWS IN A BAG. ONE BAG OF EACH PACKAGED IN AN OUTER POLYBAG WITH 1 INSTRUCTION SHEET 408-4504. 5 OUTER POLYBAGS PACKAGED IN A BOX.
5. KIT PACKAGED INDIVIDUALLY: 1 HOUSING/CONTACT ASSEMBLY, 1 STRAIN RELIEF, 1 COMBO BRACKET, 2 SCREWS AND 1 INSTRUCTION SHEET 408-4504-1 IN A WHITE BACKGROUND POLYBAG. 100 KITS PACKAGED IN A BOX.
6. KIT PACKAGED BULK: 100 HOUSING/CONTACT ASSEMBLIES IN A POLYBAG. 100 STRAIN RELIEFS IN A POLYBAG. 100 COMBO BRACKETS IN A BAG. 200 SCREWS IN A BAG. ONE BAG OF EACH PACKAGED IN AN OUTER POLYBAG WITH 1 INSTRUCTION SHEET 408-4504. 5 OUTER POLYBAGS PACKAGED IN A BOX.

6	1116377-3
5	1116377-2
4	1116377-1
DESCRIPTION	PART NO

THIS DRAWING IS A CONVERSION FROM THE PREVIOUS AMP CORPORATION DRAWING FORMAT TO THE TYCO ELECTRONICS CORPORATION FORMAT. THE CONTENT OF THIS DRAWING HAS NOT CHANGED.

DIMENSIONS: mm[INCHES]

TOLERANCES UNLESS OTHERWISE SPECIFIED:
0 PLC ±:
1 PLC ±:
2 PLC ±:
3 PLC ±:
4 PLC ±:
ANGLES ±:

MATERIAL : 1
FINISH : :

DWN SMITH 07AUG98
CHK L LINCOLN 28OCT98
APVD L LINCOLN 28OCT98

AMP Incorporated
Harrisburg, PA 17105-3608

NAME KIT,NMC CONNECTOR,2 COND+GND, 12 AND 14 AWG SOLID COPPER

PRODUCT SPEC -
APPLICATION SPEC -
WEIGHT -

SIZE A1 CAGE CODE 00779 DRAWING NO C-1116377 RESTRICTED TO -

CUSTOMER DRAWING SCALE 4:1 SHEET 1 OF 1 REV D

AMP 4805 REV 31MAR2000
PrvENGINEER DRAWING

Downloaded from Elcodis.com electronic components distributor