DRAWING MADE IN AMERICAN PROJECTION

NUMBER C-165514

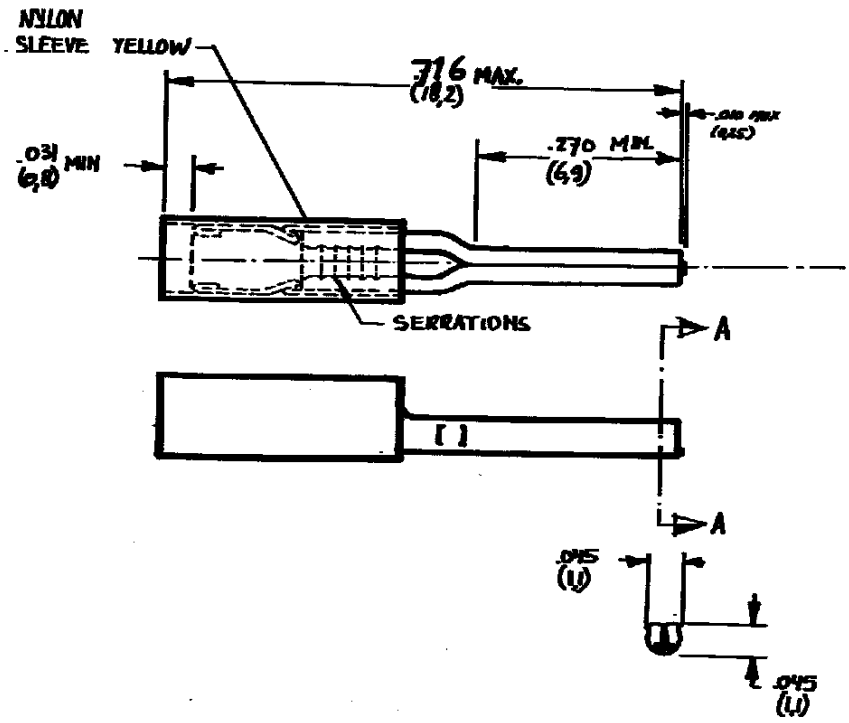

SECTION A-A

DOC. CENTRE
29 OKT. 1991

CUSTOMER COPY FOR REFERENCE ONLY

©1975 BY AMP-HOLLAND N.V. ALL RIGHTS RESERVED A-MP PRODUCTS COVERED BY PATENTS AND/OR PATENTS PENDING.

AMP-HOLLAND N.V.
's-Hertogenbosch

ORDER NO.	MATERIAL	PLATING
165514-1	COPPER	TINPLATED

WIRE-RANGE 26-22 AWG (0,15-0,4 mm²) | INSUL.-RANGE .083 DIA. (2,1) | FIRST USED —#—

SCALE N.T.S. | SIZE A | NO C-165.514 | REV D

DR R.W.M.B. DATE 26-8-72 | DR DATE | CHK DATE | APP DATE 28-8-72

NAME PIDG WIRE PIN

DIMENSIONS IN (MM) DO NOT SCALE PRINT

Downloaded from Elcodis.com electronic components distributor