DRAWING MADE IN AMERICAN PROJECTION

NUMBER 421337

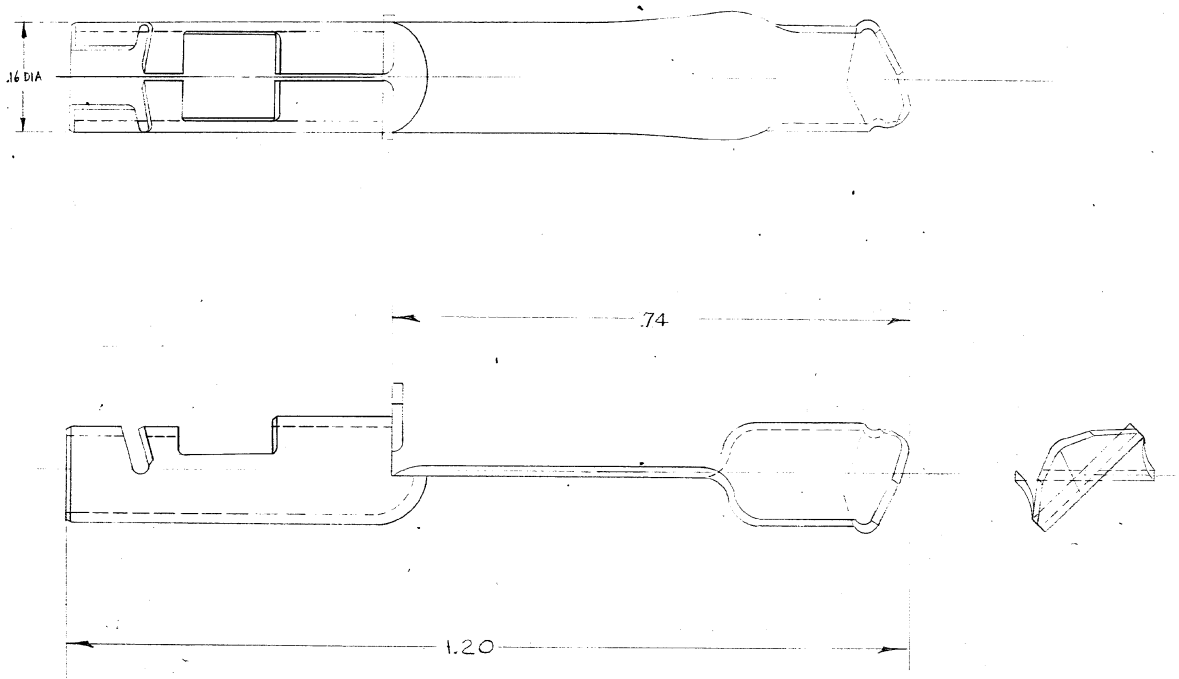

421337-7	SOLD
421337-2	TIN
PART NO.	PLATING

DWG SIZE	NUMBER	NAME	REMARKS	ITEM NO
MATERIAL FINE GRAIN BRASS	HEAT TREAT		COATING OR PLATING SEE ABOVE	
WIRE RANGE / AREA	UNLESS OTHERWISE SPECIFIED	REMOVE BURRS, BREAK SHARP EDGES .015 R - MAX. DECIMALS .00 ± .02, .000 ± .005, .0000 ± .0005 ANGLES ±0° 30'		
CLASS	TYPE LANCE LOK			
DR. E. E. Simmons 9/3/70	FIRST USED		AMP INCORPORATED HARRISBURG, PENNA.	
CHK. Jeff Baker 9-4-70	PPP		LOC. C NO. 421337	REV A
APD. Ron Genin 9/4/70	SCALE 10:1	NAME SPRING-RIGHT HAND.		
REL.				

REQUIRED PER ASSEMBLY

LTR	REVISION RECORD	ECN	DR	DATE
A	-7 was -3			
B	RELEASED TO CUST			

DESCRIPTION

CUSTOMER DRAWING

DIMENSIONS IN INCHES. DO NOT SCALE PRINT.

PRINT SIZE 12

AMP 1256 REV 9/66

Downloaded from Elcodis.com electronic components distributor