FILE NO.	AA-CD-805-01

NOTES:

① MAT'L: COPPER (STOCK TKN. $\frac{.031}{79}$ ±.001)
PLATING: ELECTRO TIN (.0003 MIN)
② TIN-PLATED BRASS FUNNEL FERRULE
③ NYLON INSULATION (COLOR CODED RED)

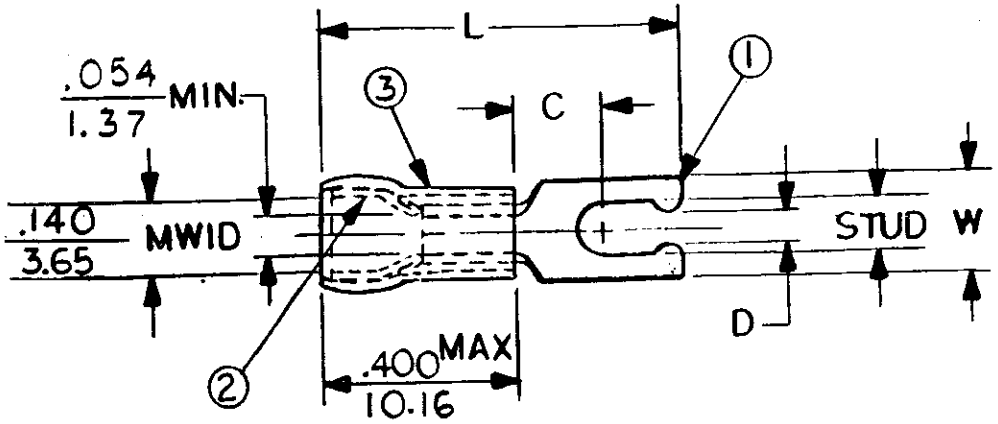

STUD SIZES: (±.005)

02 = .094
04 = .119
06 = .146
08 = .173
10 = .198
14 = .265
56 = .328
38 = .390

"UL" LISTING #E32244
"CSA" LISTING #18689

WIRE SIZE: 22 – 18 AWG
.25 – 1.5 MM²

ALL DIMENSIONS = $\frac{\text{INCHES}}{\text{MM}}$

(MWID) = DENOTES MAXIMUM WIRE INSULATION DIAMETER

PART NUMBER	"W" ±.010	"C" MIN.	"L" MAX.	"D" ±.005			AVAILABLE STUD SIZES	
AA-8190-	.260 / 6.60	.235 / 5.97	.870 / 22.10	.111 / 2.82			06	
AA-8191-	.290 / 7.37	.235 / 5.97	.880 / 22.35	.137 / 3.48			08	
AA-8192-	.328 / 8.33	.235 / 5.97	.930 / 23.62	.163 / 4.14			10	

DIMENSIONAL TOLERANCES UNLESS OTHERWISE SPECIFIED			REFERENCE	SCALE: NTS	DATE	TITLE:
FRAC.	DEC.	ANG.		DRWN. BY: JJ	11·8·84	SNAP SPADE TONGUE TERMINAL AVIKRIMP 800-SERIES
±	±	±		CHKD. BY: GZ	11·14·84	
				APPRD. BY:		

ETC molex INCORPORATED

DWG. NO. A CUSTOMER DWG

Downloaded from Elcodis.com electronic components distributor