THIS COPY IS PROVIDED ON A RESTRICTED BASIS AND IS NOT TO BE USED IN ANY WAY DETRIMENTAL TO THE INTERESTS OF PANDUIT CORP.

PANDUIT PART NUMBER	STUD SIZE	DIMENSIONS in.				
		A ±.03	W ±.01	C ±.02	M ±.03	H ±.01
PNF14-5SLF	#5	.75 (19.05)	.25 (6.35)	.19 (4.83)	.64 (16.26)	.12 (3.05)
PNF14-6SLF	#6	.75 (19.05)	.25 (6.35)	.19 (4.83)	.64 (16.26)	.14 (3.56)
PNF14-8SLF	#8	.82 (20.83)	.29 (7.37)	.23 (5.84)	.68 (17.27)	.16 (4.06)
PNF14-10SLF	#10	.81 (20.57)	.33 (8.38)	.23 (5.84)	.68 (17.27)	.19 (4.83)
PNF14-14SLF	1/4"	.91 (23.11)	.44 (11.18)	.28 (7.11)	.74 (18.80)	.25 (6.35)

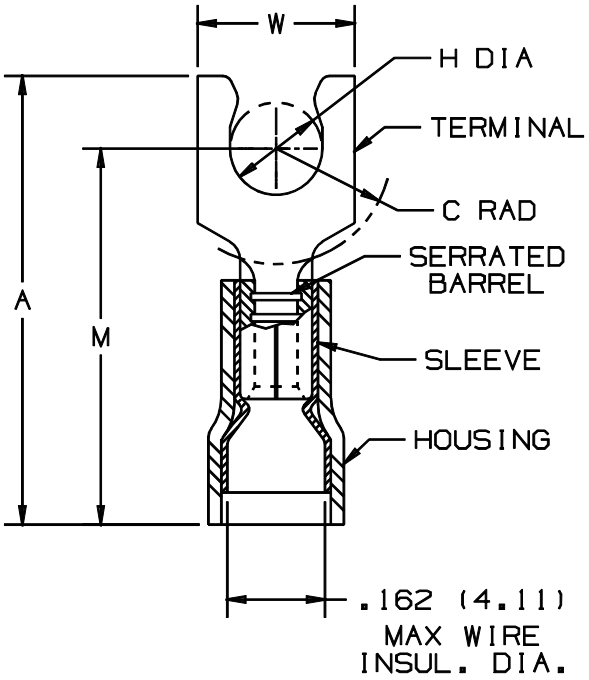

NOTES:

1. UL LISTED AND CSA CERTIFIED FOR:
   A. 600V. MAX. VOLTAGE RATING
   B. #16-14AWG STRANDED COPPER WIRE ONLY
   C. 221° F (105° C) MAX. TEMP. RATING
2. MATERIAL:
   A. STAMPING - .03" (.8) THK COPPER, TIN PLATED
   B. HOUSING - NYLON, BLUE
   C. SLEEVE - BRASS, TIN PLATED
3. PACKAGE QTY: STD. PKG. -C = 100
   BULK PKG. -M = 1000
4. DIMENSIONS IN BRACKETS ARE IN MILLIMETERS
5. INSTALLATION TOOLS:
   A. UL LISTED AND CSA CERTIFIED: CT-510
   B. PANDUIT APPROVED: CT-400, CT-460, CT-500 CT-550, CT-1550, CT-1551
6. WIRE STRIP LENGTH: 7/32 +1/32 -0

LISTED 587H E52164

CERTIFIED LR31212

A41252_03

REV	DATE	BY	CHK	DESCRIPTION	ECN #	CUST	PM
03	2/98	TM		UPDATED DIMENSIONS			
02	11/96	BK	RLS	REDRAWN WITH REVISIONS		LA	DH

PANDUIT CORP. TINLEY PARK, ILLINOIS

#16-14 BARREL FUNNELED ENTRY NYLON INSULATED SHORT LOCKING FORK, .162 (4.11) MAX WIRE INSUL. DIA.

DRAWN BY	CHK'D	SCALE	DRAWING NO.
DAW		NONE	A41252

Downloaded from Elcodis.com electronic components distributor