THIS COPY IS PROVIDED ON A RESTRICTED BASIS AND IS NOT TO BE USED IN ANY WAY DETRIMENTAL TO THE INTERESTS OF PANDUIT CORP.

PANDUIT PART NUMBER	STUD SIZE	DIMENSIONS in.				
		A ±.03	W ±.01	C ±.02	M ±.03	H ±.01
PV10-5SLF	#5	.86 (21.84)	.25 (6.35)	.22 (5.59)	.77 (19.56)	.12 (3.05)
PV10-6SLF	#6	.87 (22.10)	.25 (6.35)	.22 (5.59)	.77 (19.56)	.14 (3.56)
PV10-8SLF	#8	.92 (23.37)	.29 (7.37)	.26 (6.60)	.81 (20.57)	.16 (4.06)
PV10-10SLF	#10	.92 (23.37)	.33 (8.38)	.26 (6.60)	.81 (20.57)	.19 (4.83)
PV10-14SLF	1/4"	1.02 (25.91)	.45 (11.43)	.33 (8.38)	.86 (21.84)	.25 (6.35)

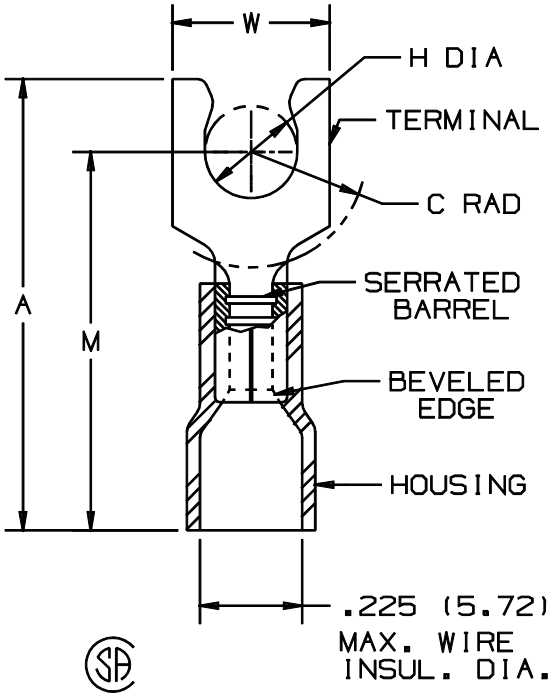

NOTES:

1. RECOMMENDED FOR:
   A. 600V. MAX. VOLTAGE RATING (1000V. MAX IN SIGNS, FIXTURES AND LUMINARIES)
   B. #12-10 AWG STRANDED COPPER WIRE ONLY
   C. 221° F (105° C) MAX. TEMP. RATING
2. MATERIAL:
   A. STAMPING - .04 (1.02) THK COPPER, TIN PLATED
   B. HOUSING - VINYL, YELLOW
3. PACKAGE QTY: STD. PKG. -L=50
   BULK PKG. -D=500
4. DIMENSIONS IN BRACKETS ARE IN MILLIMETERS
5. INSTALLATION TOOLS: CT-550, CT-1550, CT-1551
6. WIRE STRIP LENGTH : 5/16 $^{+1/32}_{-0}$ (7.9 $^{+0.8}_{-0}$)

LISTED 587H E52164

CERTIFIED LR-31212

A41247_05

REV	DATE	BY	CHK	DESCRIPTION	ECN	QA	CUST	PM
5	1/01	RM		FILESPEC WAS N41247AA_PCD_04				
4	1/97	JAMB		UPDATE NOTES, MAX. WIRE INSUL DIA. WAS .230(5.84)	05448			
3	7-96	JB	RLS	ORIGINAL FILE SPEC WAS A41247A GEN"L. REVISIONS TO TABLE & NOTES	04884		LA	DBH
2	7-88	DW		REDRAWN WITH REVISIONS			LA	JRB

PANDUIT CORP. TINLEY PARK, ILLINOIS

#12-10 BARREL FUNNELED VINYL INSULATED SHORT LOCKING FORK, .225 (5.72) MAX. WIRE INSULATION DIAMETER

DRAWN BY	CHK'D	SCALE	DRAWING NO.
DAW		NONE	A41247

Downloaded from Elcodis.com electronic components distributor