THIS COPY IS PROVIDED ON A RESTRICTED BASIS AND IS NOT TO BE USED IN ANY WAY DETRIMENTAL TO THE INTERESTS OF PANDUIT CORP.

PANDUIT PART NUMBER	STUD SIZE	DIMENSIONS in.				
		A ±.03	W ±.01	C ±.02	M ±.03	H ±.01
P10-6F	#6	.75 (19.05)	.31 (7.87)	.22 (5.59)	.55 (13.97)	.15 (3.81)
P10-8F	#8	.78 (19.81)	.37 (9.40)	.22 (5.59)	.55 (13.97)	.17 (4.32)
P10-10F	#10	.78 (19.81)	.37 (9.40)	.23 (5.84)	.55 (13.97)	.20 (5.08)
P10-14F	1/4"	.89 (22.61)	.50 (12.7)	.30 (7.62)	.60 (15.24)	.27 (6.86)

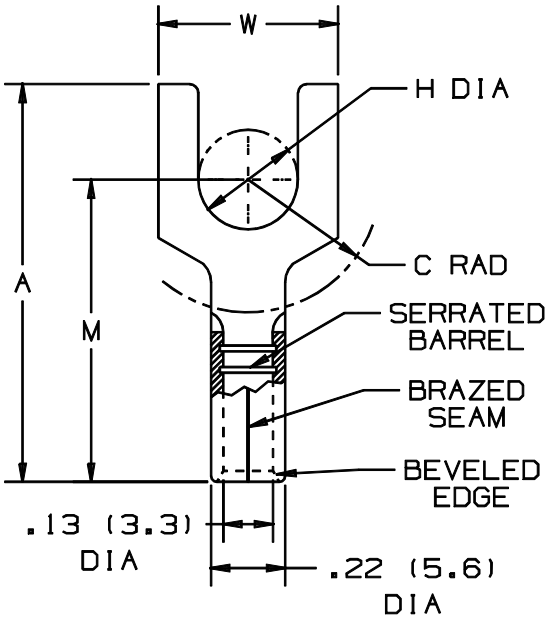

NOTES:

1. UL LISTED AND CSA CERTIFIED FOR:
   A. #12-10 AWG SOLID OR STRANDED COPPER WIRE
   B. 302° F (150° C) MAX. TEMP. RATING
2. MATERIAL:
   A. STAMPING - .04" (1.02) THK COPPER, TIN PLATED
3. PACKAGE QTY: STD. PKG.-L=50
   BULK PKG.-D=500
4. DIMENSIONS IN BRACKETS ARE IN MILLIMETERS
5. INSTALLATION TOOLS:
   A. UL LISTED AND CSA CERTIFIED: CT-100, CT-200, CT-570, CT-1570
   B. PANDUIT APPROVED: CT-160, CT-260
6. WIRE STRIP LENGTH: $9/32^{+1/32}_{-0}$ ($7.1^{+.8}_{-0}$)

UL LISTED 587H E52164

CSA CERTIFIED LR31212

A41256_06

REV	DATE	BY	CHK	DESCRIPTION	ECN #	CUST	PM
06	1/01	RM		FILESPEC WAS N41256AA_PCD_05			
05		JKD		ADDED CT-1570 TOOL	07632		
4	1-95	MS	RLS	UPDATED NOTES AND DIMENSIONS	02942	LCA	TFKE
3	7-88	DW	CH	REDRAWN WITH REVISIONS			JRB

PANDUIT CORP. TINLEY PARK, ILLINOIS

#12-10 BARREL NON-INSULATED FORK

DRAWN BY	CHK'D	SCALE	DRAWING NO.
DAW	CJH		A41256

Downloaded from Elcodis.com electronic components distributor