THIS COPY IS PROVIDED ON A RESTRICTED BASIS AND IS NOT TO BE USED IN ANY WAY DETRIMENTAL TO THE INTERESTS OF PANDUIT CORP.

PANDUIT PART NUMBER	STUD SIZE	DIMENSIONS in.				
		A ±.020	W ±.010	C ±.015	M ±.020	H ±.010
PV14-5SLF	#5	.80 (20,32)	.25 (6,35)	.22 (5,59)	.69 (17,53)	.12 (3,05)
PV14-6SLF	#6	.80 (20,32)	.25 (6,35)	.22 (5,59)	.69 (17,53)	.14 (3,56)
PV14-8SLF	#8	.85 (21,59)	.29 (7,37)	.26 (6,60)	.74 (18,80)	.16 (4,06)
PV14-10SLF	#10	.86 (21,84)	.33 (8,38)	.26 (6,60)	.74 (18,80)	.19 (4,83)
PV14-14SLF	1/4"	.95 (24,13)	.44 (11,18)	.33 (8,38)	.80 (20,32)	.25 (6,35)

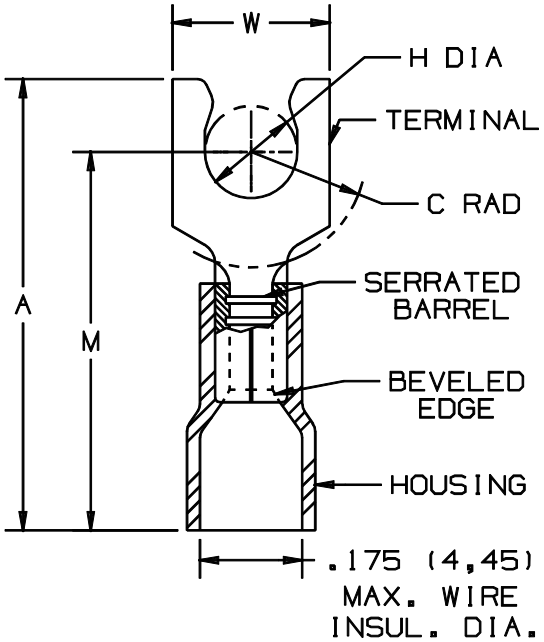

NOTES:

1. RECOMMENDED FOR:
   A. 300V. MAX. VOLTAGE RATING
   B. #16-14 AWG STRANDED COPPER WIRE
   C. 221° F (105° C) MAX. TEMP. RATING
2. MATERIAL:
   A. STAMPING - .03" (.762) THK COPPER, TIN PLATED
   B. HOUSING - VINYL, BLUE
3. PACKAGE QTY: STD. PKG. 100
   BULK PKG. 1000
4. DIMENSIONS IN BRACKETS ARE IN MILLIMETERS
5. INSTALLATION TOOLS:
   A. PANDUIT APPROVED: CT-400, CT-460

A41246_04

REV	DATE	BY	CHK	DESCRIPTION	QA	CUST	PM	APP
4	10-00	EJS		UPDATED STANDARD PACKAGE QUANTITY TO 100,				
				REMOVED CT-510, FILE NAME WAS A41246A				
3	7-88	DW		REDRAWN WITH REVISIONS				

PANDUIT CORP. TINLEY PARK, ILLINOIS

#16-14 BARREL FUNNELED VINYL INSULATED SHORT LOCKING FORK, .175 ((4,45) MAX. WIRE INSULATION DIAMETER

DRAWN BY	CHK'D	SCALE	DRAWING NO.
DAW	CJH	NONE	A41246

Downloaded from Elcodis.com electronic components distributor