DRAWING MADE IN THIRD ANGLE PROJECTION

THIS DRAWING IS UNPUBLISHED. | RELEASED FOR PUBLICATION ,19 .

© COPYRIGHT 19 BY AMP INCORPORATED. ALL INTERNATIONAL RIGHTS RESERVED.

| LOC | DIST |
|---|---|
| G | 86 |

REVISIONS

| ZONE | LTR | DESCRIPTION | DATE | APPD |
|---|---|---|---|---|
| | D | REV & REDRAWN PER G-5357 & G-5800 | 03/09/90 | DKS AJK |

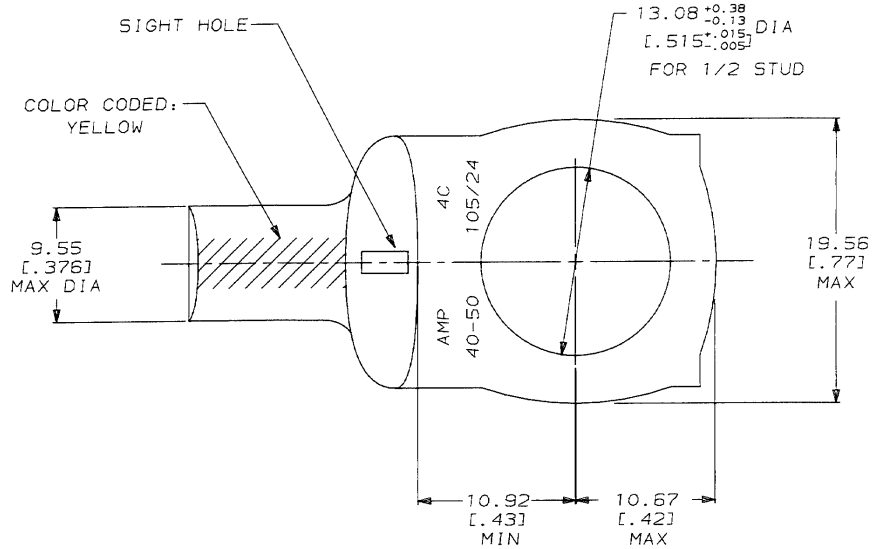


1 TIN PL 0.00381[.000150] MIN THK PER MIL-T-10727

2 CIRCULAR MIL AREA RANGE: 33,100-52,600 CM

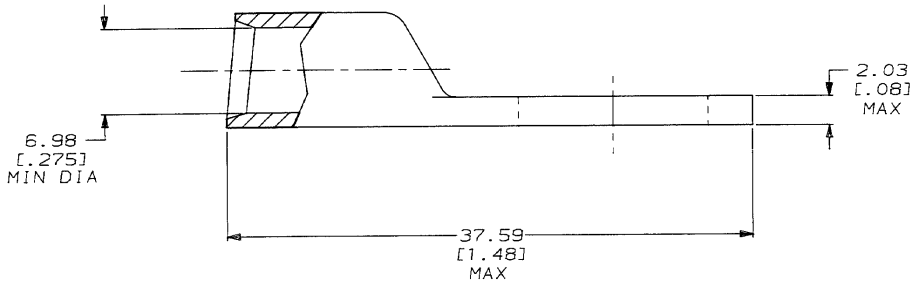


328178

328178-1

PART NO

| | | |
|---|---|---|
| DO NOT SCALE PRINT. UNLESS SPECIFIED DIMENSIONS IN mm [INCHES] TOLERANCES ON : 2 PLC DEC ± 0.51[.020] 3 PLC DEC ± - ANGLES ± - | DR 03/09/90 DK SCHRUM | AMP Incorporated Harrisburg, PA 17105-3608 |
| | CHK 3/92 AJ KAUFMAN | |
| | APPD 3/92 WJ VOCKROTH | NAME TERMINAL, AMPOWER™ WIRE SIZE: 21.0mm² [4] AWG |
| MATERIAL COPPER ASTM B-188 ANNEALED | APPD 3/92 CR RHOADS | |
| | PRODUCT SPEC 108-30200 | |
| FINISH 1 | APPLICATION SPEC - | SIZE © CAGE CODE 00779 DRAWING NO 328178 |
| | WEIGHT - | SCALE 4:1 SHEET 1 OF 1 |

METRIC

CUSTOMER DRAWING

AMP 1471-6 REV 7-90

09 APR 1992 09:32:02 AMP26463 <US128A>DEPI1123>DWG1123>U.AMPOWER>U.RECT-TONGUE

Downloaded from Elcodis.com electronic components distributor