DRAWING MADE IN THIRD ANGLE PROJECTION

THIS DRAWING IS UNPUBLISHED. RELEASED FOR PUBLICATION ,19 .
© COPYRIGHT 19 BY AMP INCORPORATED. ALL INTERNATIONAL RIGHTS RESERVED.

LOC	DIST
G	86

P	F	ZONE	LTR	DESCRIPTION	DATE	APPD
			T	REACTIVATED PER G-5784	1/31/92	DKS AJK

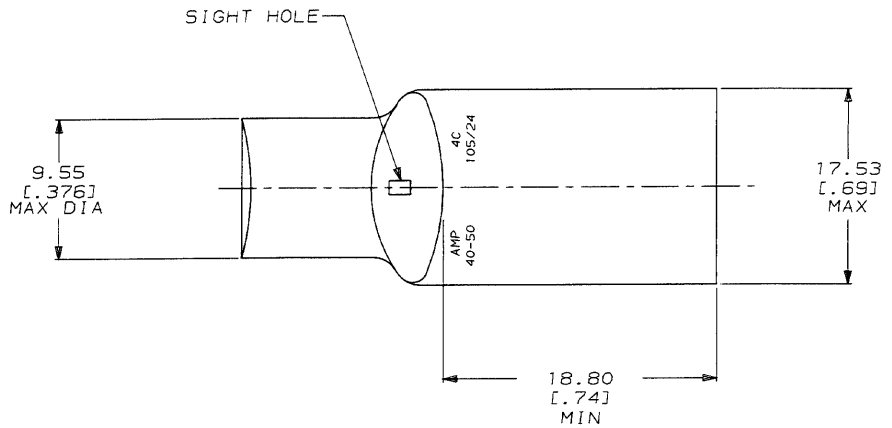

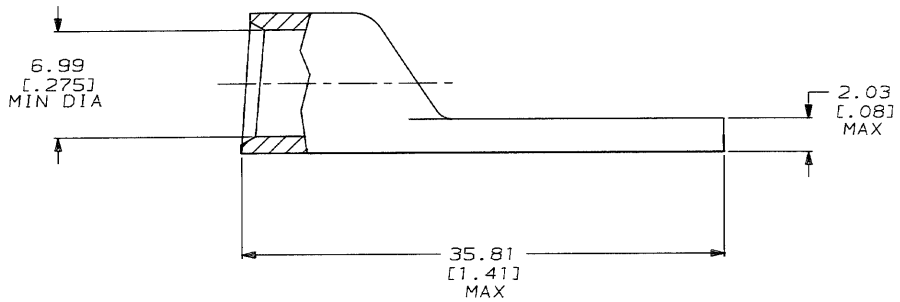

1 TIN PL 0.00254[.000100] MIN THK PER MIL-T-10727

2 CIRCULAR MIL AREA RANGE: 33,100-52,600

328160

DO NOT SCALE PRINT. UNLESS SPECIFIED DIMENSIONS IN mm [INCHES] TOLERANCES ON : 2 PLC DEC ± - 3 PLC DEC ± - ANGLES ± -	DR 6/9/86 L WAREHAM	AMP	AMP Incorporated Harrisburg, PA 17105-3608
	CHK 6/10/86 P MUTZABAUGH		
	APPD 7/1/86 WJ VOCKROTH	NAME	TERMINAL, AMPOWER™, WIRE SIZE: 21.0mm² [4] AWG
MATERIAL COPPER ASTM B-152 ANNEALED	APPD - -		
	PRODUCT SPEC -		
FINISH 1	APPLICATION SPEC -	SIZE C / CAGE CODE 00779	DRAWING NO 328160
	WEIGHT .019 LB	SCALE NTS	SHEET 1 OF 1

METRIC

CUSTOMER DRAWING

AMP 1471-6 REV 9-89

31 JAN 1992 10:42:35 AMP25463 <S1284>DEPT1123>DWG1123>U AMPOWER>U RECT-TONGUE

Downloaded from Elcodis.com electronic components distributor