DRAWING MADE IN THIRD ANGLE PROJECTION

THIS DRAWING IS UNPUBLISHED. | RELEASED FOR PUBLICATION , 19 .

© COPYRIGHT 19 BY AMP INCORPORATED, HARRISBURG, PA. ALL INTERNATIONAL RIGHTS RESERVED. AMP PRODUCTS MAY BE COVERED BY U.S. AND FOREIGN PATENTS AND/OR PATENTS PENDING.

| LOC | DIST |
|---|---|
| AF | 50 |

| P | F | ZONE | LTR | REVISIONS DESCRIPTION | DATE | APPD |
|---|---|---|---|---|---|---|
| | | | C | RELEASED - 3 PER PRCM 87-83 & REDRAWN PER STANDARDS | 8-6 87 | JJ RN |
| | | | D | REV PER D710-0427-95 | 29 Sep 95 | DWF |

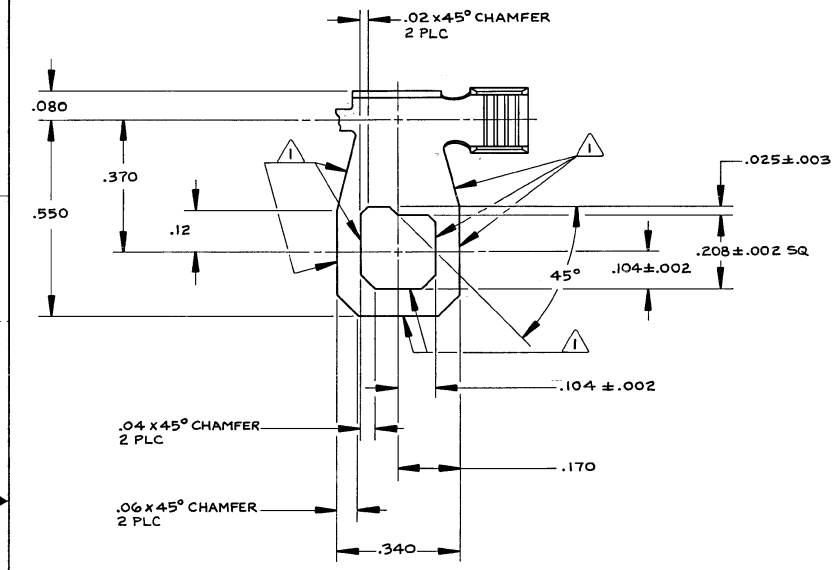


1 AREAS INDICATED HAVE MAXIMUM BURR HEIGHT OF .001 ON BOTH SIDES.

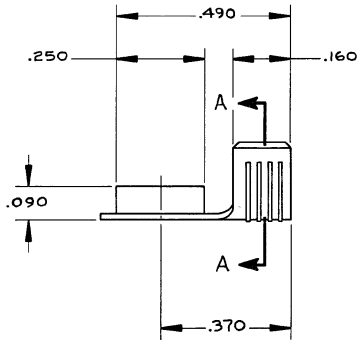


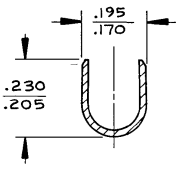


SECTION A-A

| BRIGHT TIN | 61016-3 |
|---|---|
| | |
| MATTE TIN | 61016-1 |
| FINISH | PART NUMBER |

~~PART NO~~

UNLESS OTHERWISE SPECIFIED DIMENSIONS ARE IN INCHES TOLERANCES ON
2 PL DEC ±.01
3 PL DEC ±.015
ANGLES ±1°0'

MATERIAL: BRASS 4HD

FINISH: SEE TABLE

DR
CHK S. James 8-6-87
APPD D. Washington 8.10.87
APPD Don N. Crane 11 Sep 87
PRODUCT SPEC
APPLICATION SPEC
WEIGHT

AMP | AMP INCORPORATED Harrisburg, Pa. 17105

NAME: FLAG TONGUE

| SIZE | FSCM NO | DRAWING NO |
|---|---|---|
| C | 00779 | 61016 |
| SCALE 5:1 | | SHEET 1 OF 1 |

AMP 1471-7 REV 10-84

CUSTOMER DRAWING

61016

Downloaded from Elcodis.com electronic components distributor