DRAWING MADE IN THIRD ANGLE PROJECTION

THIS DRAWING IS UNPUBLISHED. RELEASED FOR PUBLICATION ,19 .

© COPYRIGHT 19 BY AMP INCORPORATED. ALL INTERNATIONAL RIGHTS RESERVED.

LOC	DIST
AF	50

P	F	ZONE	LTR	DESCRIPTION	DATE	APPD
			D	RELEASED PER F.A.S.R.	5/29/90	MSF

REVISIONS

REELING OFF BOTTOM OF REEL WIRE BARRELS DOWN

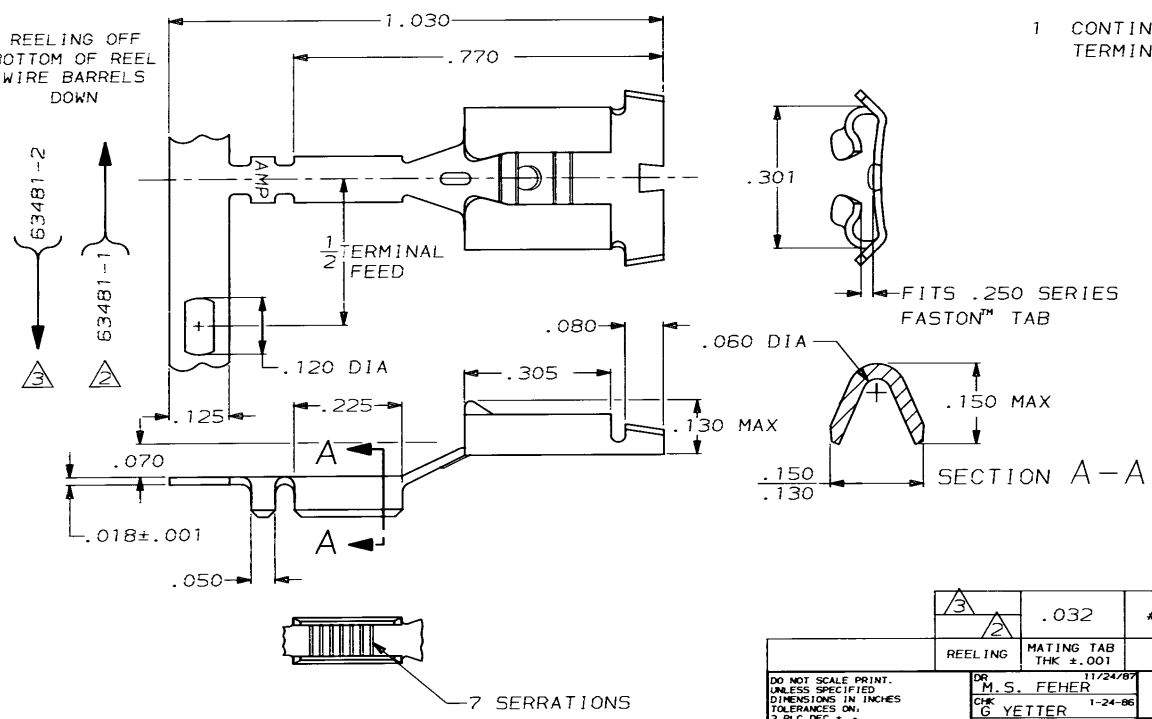

1 CONTINUOUS STRIP ON REELS WITH TERMINALS LOCATED ON .620 CENTERS.

3	.032	#21-#15 AWG	63481-2
2			63481-1
REELING	MATING TAB THK ±.001	MAGNET WIRE RANGE	PART NO

DO NOT SCALE PRINT. UNLESS SPECIFIED DIMENSIONS IN INCHES TOLERANCES ON: 2 PLC DEC ± - 3 PLC DEC ± .010 ANGLES ± -

MATERIAL: #4 HARD BRASS

FINISH: PRE-TIN .000080 MIN THK MIL-T-10727

DR M.S. FEHER 11/24/87
CHK G YETTER 1-24-86
APPD D SCHWENK 1-24-86
APPD C G ATHERTON 1-24-86
PRODUCT SPEC -
APPLICATION SPEC -
WEIGHT -

AMP — AMP INCORPORATED Harrisburg, Pa. 17105

NAME: STATOR RECEPTACLE AMPLIVAR™

SIZE B | FSCM NO 00779 | DRAWING NO 63481

SCALE 5:1 | SHEET 1 OF 1

CUSTOMER DRAWING

AMP 1470-15 REV 3-87

26 MAY 1990 09:29:33 F02644 <DSTOMA>DEPT2127>DWG2127>4 BOBBINTABS

Downloaded from Elcodis.com electronic components distributor