DRAWING MADE IN THIRD ANGLE PROJECTION

THIS DRAWING IS UNPUBLISHED. RELEASED FOR PUBLICATION ,19 .

© COPYRIGHT 19 BY AMP INCORPORATED. ALL INTERNATIONAL RIGHTS RESERVED.

LOC	DIST	P	F
AF	50		

REVISIONS

ZONE	LTR	DESCRIPTION	DATE	APPD
	B	ADDED -2 PER 0710-0342-95	8/4/95	JR/PD

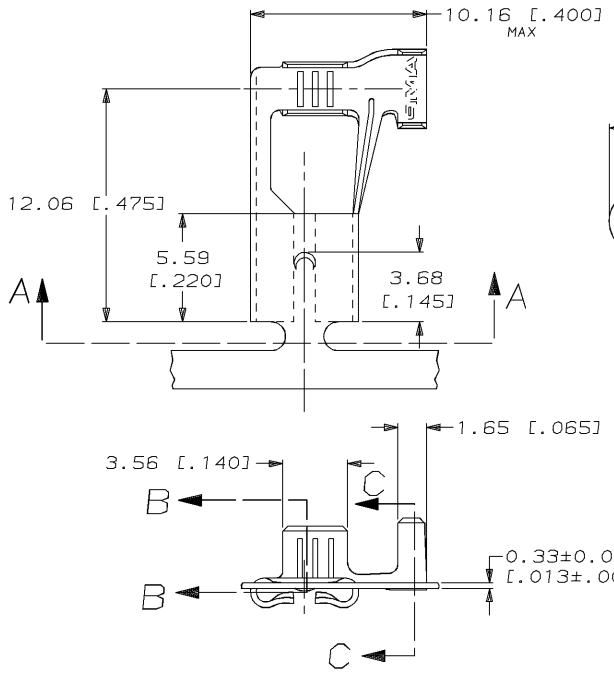

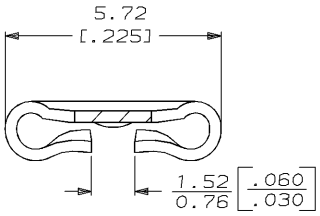

SECTION A–A
SCALE 10:1

1 CONTINUOUS STRIP ON REELS.

2 ACCEPTS [#20–#16] AWG.

3 INSULATION RANGE 2.28–3.30 [.090–.130] DIA.

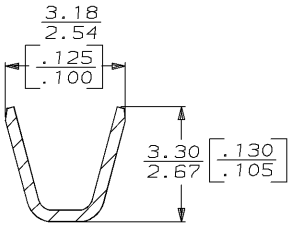

SECTION B–B
SCALE 10:1

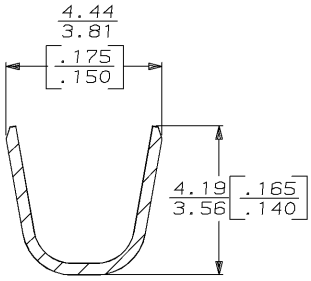

SECTION C–C
SCALE 10:1

FINISH	MATING TAB THICKNESS	PART NO
0.002032 [.000080] MIN TIN	0.81±0.025 [.032±.001]	63848-2
–		63848-1

TYPE	WIDTH	STRIP LENGTH ±0.38 [.015]	TYPE	WIDTH	HEIGHT ±0.051 [.002]	WIRE
F OR O	3.56 [.140]	4.78 [.188]	F	2.29 [.090]	1.34 [.053]	[#16]
					1.17 [.046]	[#18]
					1.04 [.041]	[#20]
INSUL BARREL CRIMP		WIRE BARREL CRIMP				

DO NOT SCALE PRINT.
UNLESS SPECIFIED
DIMENSIONS ARE IN INCHES
TOLERANCES ON:
2 PLC DEC ± 0.25 [.010]
3 PLC DEC ± –
ANGLES ± –

MATERIAL: H04 BRASS

FINISH: SEE TABLE

DR	5/11/95	JR RUTH
CHK	5/11/95	MS FEHER
APPD	5/11/95	P DESANTIS
APPD	5/11/95	D REINER
PRODUCT SPEC	–	
APPLICATION SPEC	114-2079	
WEIGHT	–	

AMP Incorporated
Harrisburg, PA 17105-3608

NAME: RECEPTACLE, FASTON, FLAG, 4.75 [.187] SERIES

SIZE	CAGE CODE	DRAWING NO
B	00779	63848
SCALE 5:1		SHEET 1 OF 1

AMP 1470-15 REV 11-89

04-AUG-95 15:19:00 amp13469 /ws/dept2121/dwg2121/u.faston-ceb/u.187-fl

CUSTOMER DRAWING

Downloaded from Elcodis.com electronic components distributor