DRAWING MADE IN THIRD ANGLE PROJECTION

THIS DRAWING IS UNPUBLISHED. | RELEASED FOR PUBLICATION ,19 .

© COPYRIGHT 19 BY AMP INCORPORATED. ALL INTERNATIONAL RIGHTS RESERVED.

LOC	DIST	P	F
AF	50		

REVISIONS

ZONE	LTR	DESCRIPTION	DATE	APPD
	D	REVISED AF-8271	1/7/93	JR/CM

1 CONTINUOUS STRIP ON REELS

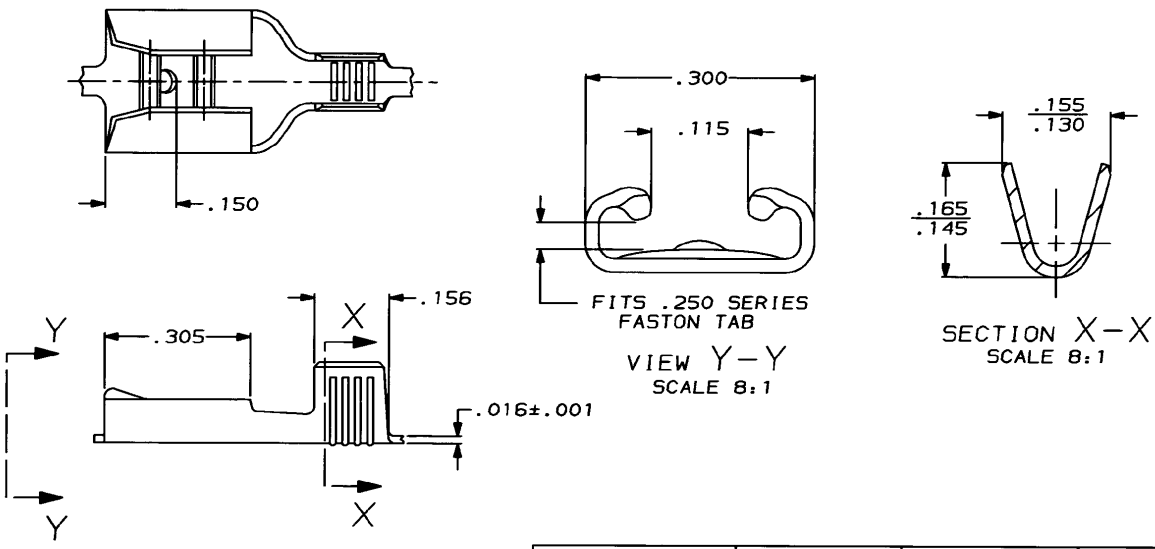

TIN .000080 MIN	18-14	.032	42845-2
			42845-1
FINISH	WIRE SIZE	MATING TAB THK ±.001	PART NO

DO NOT SCALE PRINT.
UNLESS SPECIFIED
DIMENSIONS ARE IN INCHES
TOLERANCES ON:
2 PLC DEC ± -
3 PLC DEC ± .015
ANGLES ± -

MATERIAL: 4M BRASS

FINISH: SEE TABLE

DR 5/9/90 JR RUTH
CHK 5/9/90 RS FEHER
APPD 5/9/90 C MEYERS
APPD 5/9/90 R KUZO
PRODUCT SPEC -
APPLICATION SPEC -
WEIGHT -

AMP Incorporated
Harrisburg, PA 17105-3608

NAME: RECEPTACLE, FASTON, .250 SERIES

SIZE	CAGE CODE	DRAWING NO
B	00779	42845
SCALE 5:1		SHEET 1 OF 1

CUSTOMER DRAWING

AMP 1470-15 REV 11-89

Downloaded from Elcodis.com electronic components distributor