THIS DRAWING IS UNPUBLISHED. RELEASED FOR PUBLICATION -.- .

© COPYRIGHT - BY TYCO ELECTRONICS CORPORATION. ALL RIGHTS RESERVED.

LOC	DIST
AF	50

REVISIONS

P	LTR	DESCRIPTION	DATE	DWN	APVD
	K	REVISED PER ECR-06-010427	01SEP06	HMR	KR

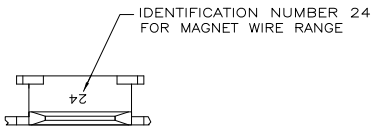

1. SLOT ACCEPTS 0.91–1.15mm [#19–#17] AWG COPPER MAGNET WIRE. 2 WIRES OF THE SAME SIZE MAX PER SLOT.
2. AFTER INSERTION INTO PLASTIC HOLDER TAB PORTION MUST BE BENT OVER 45° TO 90° OR POTTED–IN TO PREVENT PULL–OUT WHEN MATING RECEPTACLE IS DISCONNECTED.
3. CONTINUOUS STRIP ON REELS WITH TERMINALS LOCATED ON 8.38±0.08 [.330±.003] CENTERS.
4. VARNISH RESIST OVER 0.002032 [.000080] MIN TIN PER MIL–T–10727

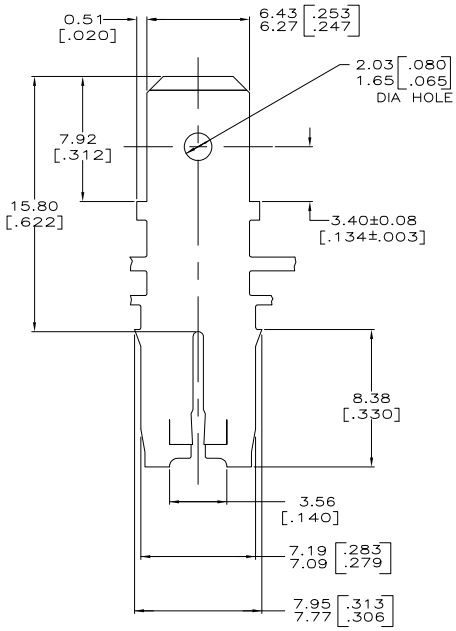

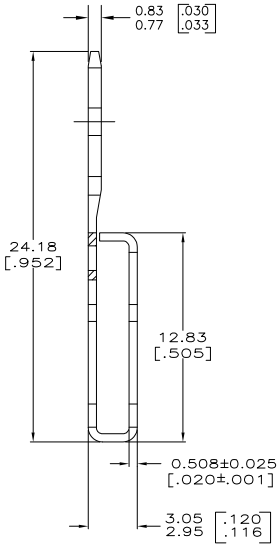

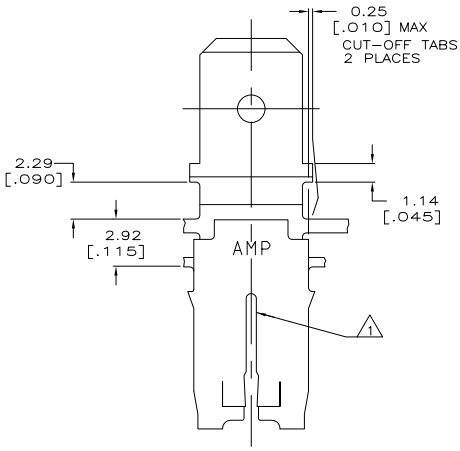

OBSOLETE	SPECIAL 4	63464–4
	STANDARD 4	63464–3
		PART NO

THIS DRAWING IS A CONTROLLED DOCUMENT.

DIMENSIONS: mm [INCHES]

TOLERANCES UNLESS OTHERWISE SPECIFIED:
0 PLC ± –
1 PLC ± –
2 PLC ± 0.25 [.010]
3 PLC ± –
4 PLC ± –
ANGLES ± –

MATERIAL: 4M PRE–MILLED BRASS

FINISH: SEE TABLE

DWN 24/OCT/94 PHILLIP M. FORTNEY
CHK 25/OCT/94 MICHAEL S. FEHER
APVD 25/OCT/94 NELSON E. NEFF
PRODUCT SPEC 108–2053
APPLICATION SPEC 114–2066
WEIGHT –

Tyco Electronics Corporation
Harrisburg, PA 17105–3608

NAME: TAB, 6.35 [.250] FASTON,™ MAG–MATE™

SIZE	CAGE CODE	DRAWING NO	RESTRICTED TO
A2	00779	C–63464	–

CUSTOMER DRAWING | SCALE 6:1 | SHEET 1 OF 1 | REV K

AMP 1471–9 REV 31MAR2000

Downloaded from Elcodis.com electronic components distributor