THIS DRAWING IS UNPUBLISHED. RELEASED FOR PUBLICATION .19 .
© COPYRIGHT 19 BY AMP INCORPORATED. ALL RIGHTS RESERVED.

LOC	DIST
AF	50

REVISIONS

P	LTR	DESCRIPTION	DATE	DWN	APVD
	A	REVISED PER OG1A-0086-98	07APR98	MF	KR

1. DIMENSION APPLIES WITH LEAF EDGE TOUCHING CARRIER SIDE OF BOX
2. SLOT TERMINATES EITHER A SINGLE OR DOUBLE MAGNET WIRE OF THE SAME SIZE AND TYPE. COPPER RANGE: 0.25-0.36mm [#30-#27] AWG.
3. POKE-IN ACCEPTS A 0.5-0.9mm² [#20-#18] AWG SOLID OR FUSED STRANDED LEAD WIRE.
4. APPLY BLUE COLORING TO THIS SURFACE DURING LOOSE PIECE OPERATION TO PROVIDE COLOR CODING OF MAGNET WIRE RANGE

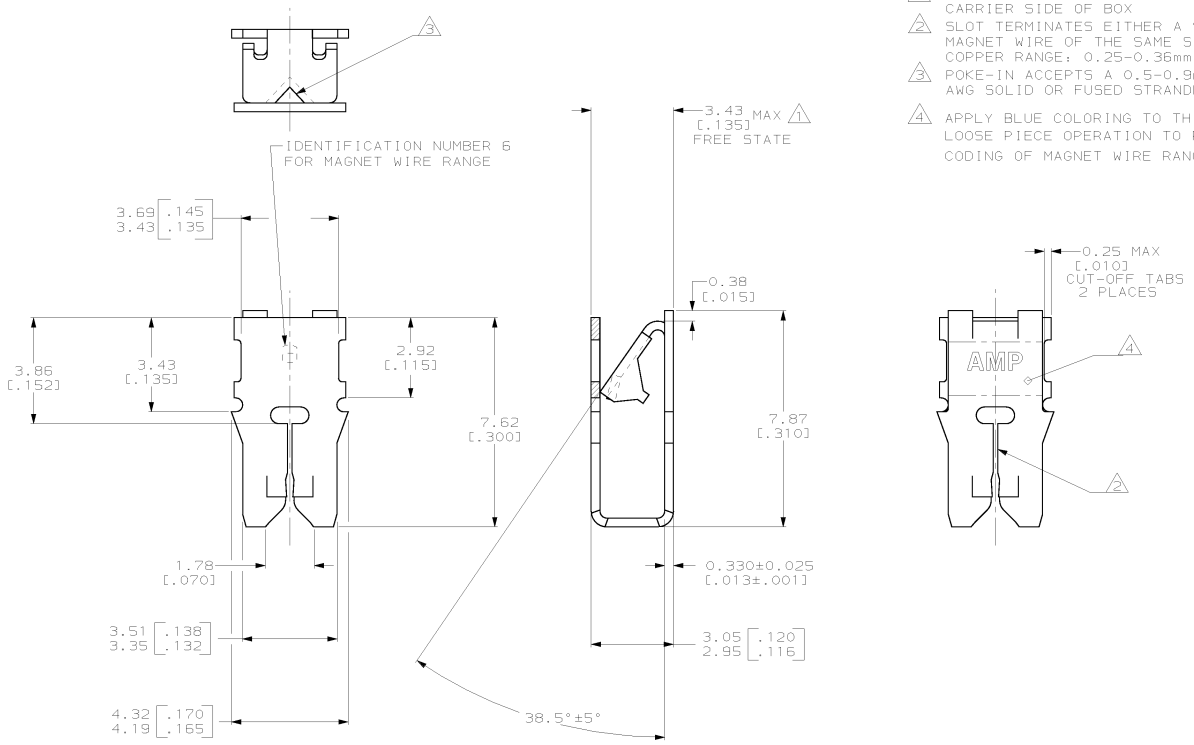

62526-1

PART NUMBER

THIS DRAWING IS A CONTROLLED DOCUMENT.

DIMENSIONS: mm [INCHES]

TOLERANCES UNLESS OTHERWISE SPECIFIED:
0 PLC ±-
1 PLC ±-
2 PLC ±0.25[.010]
3 PLC ±-
4 PLC ±-
ANGLES ±-

MATERIAL: 4M BRASS

FINISH: 0.002032[.000080] MIN TIN

DWN R.GRZYBOWSKI 21JAN98
CHK M.S.FEHER 21JAN98
APVD N.E.NEFF 21JAN98

PRODUCT SPEC 108-2012

APPLICATION SPEC 114-2046

WEIGHT –

CUSTOMER DRAWING

AMP Incorporated
Harrisburg, PA 17105-3608

NAME: TERMINAL, POKE-IN, LOOSE PIECE, MAG-MATE™

SIZE	CAGE CODE	DRAWING NO	RESTRICTED TO
A2	00779	C- 62526	–

SCALE	SHEET	OF	REV
10:1	1	1	A

AMP 1471-9 REV 11JUN97

07-APR-98 10:58:30 amp02644 /ws/dept2127/dwg2127/u.mag-mate/u.300

Downloaded from Elcodis.com electronic components distributor