THIS DRAWING IS UNPUBLISHED. RELEASED FOR PUBLICATION .19 .
(C) COPYRIGHT 19 BY AMP INCORPORATED. ALL RIGHTS RESERVED.

LOC	DIST
CM	52

REVISIONS

F	LTR	DESCRIPTION	DATE	DWN	APVD
	Y	REV & REDWN PER EC 0L30-0146-97	5-15-97	TB	RS

1. 0.00076 MIN SELECTIVE GOLD PLATING ON INSIDE OF RECEPTACLE OVER NICKEL OVER ALL UNDERPLATE.
2. WIRE RANGE: 0.12 - 0.4 MM² (26 - 22 AWG)
3. INSULATION RANGE: 0.89 - 1.65
4. PARTS ARE REVERSED REELED. FOR USE WITH MINI APPLICATORS SEE PART NUMBER 60888.

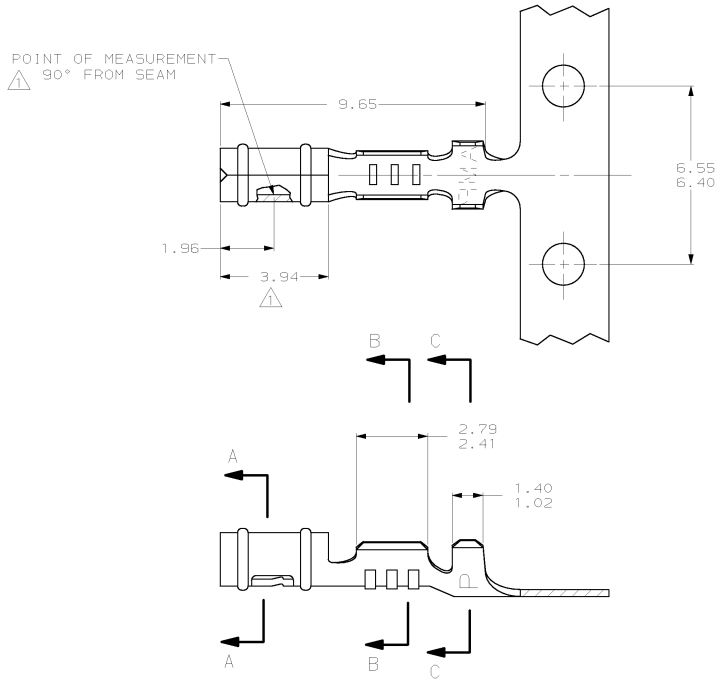

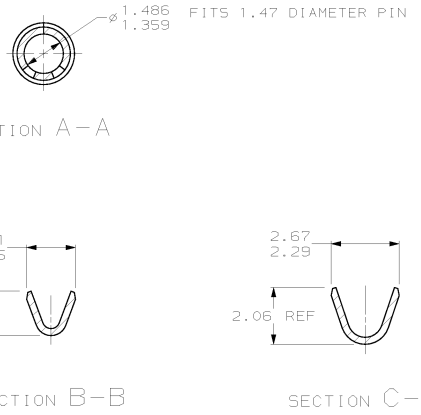

1	0.25 BE COPPER	60804-4
MATTE TIN	0.25 BE COPPER	60804-3
PRE-TIN	0.25 PH BRZ	60804-2
1	0.25 PH BRZ	60804-1
FINISH	MATERIAL	PART NUMBER

1.359	.0535	1.91	.075	2.79	.110	-	-
1.02	.040	1.65	.065	2.67	.105	-	-
0.89	.035	1.63	.064	2.41	.095	9.65	.380
0.25	.010	1.486	.0585	2.29	.090	6.55	.258
0.13	.005	1.47	.058	2.06	.081	6.40	.252
0.00076	.000030	1.40	.055	1.96	.077	3.94	.155
MM	IN	MM	IN	MM	IN	MM	IN

CONVERSION TABLE

AMP 1471-9 REV 27JUN96

THIS DRAWING IS A CONTROLLED DOCUMENT.

DIMENSIONS: MM

TOLERANCES UNLESS OTHERWISE SPECIFIED:
0 PLC ±-
1 PLC ±-
2 PLC ±0.13
3 PLC ±-
4 PLC ±-
ANGLES ±-

MATERIAL SEE TABLE
FINISH SEE TABLE

METRIC

DWN T. BECK 5-15-97
CHK R. SWING 5-15-97
APVD A. BEDDICK 8-08-97

PRODUCT SPEC 108-1025
APPLICATION SPEC 114-1008
WEIGHT -

CUSTOMER DRAWING

AMP Incorporated
Harrisburg, PA 17105-3608

NAME RECEPTACLE, .058 DIAMETER, 26-22 AWG, .035-.065 INSULATION, P.C. CONTACT

SIZE	CAGE CODE	DRAWING NO.	RESTRICTED TO
A2	00779	C-60804	-

SCALE	SHEET	OF	REV
10:1	1	1	Y

60804

15-MAY-97 06:59:25 amp22238 /home/amp22238/junk/redraw.1330

Downloaded from Elcodis.com electronic components distributor