ED3100/X

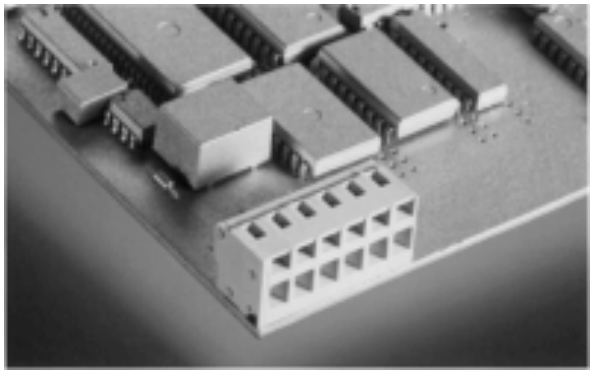

1-n poles, Spacing 5.0 mm adjustable to 5.08 mm
insert required no. of poles **x**
How to order see page 5

Ratings:		
Rated Voltage	**300 V**	**250 V**
Rated Current	**16 A**	**24 A (T60)**
Wire Size	**AWG 28-14**	**2.5 mm²**
Test Voltage		**2.0 kV**
Max. Rated Cross Section		
Single Wire (solid)		**2.5 mm²**
Stranded Wire (flexible)		**2.5 mm²**
Stranded wire with Ferrules		**1.5 mm²**
Dimensions		
Spacing		**5.0 mm (5.08 mm)**
PCB Hole Diameter		**1.0 mm (2x)**
Stripped Length		**6.0 mm**
Materials		
Insulating Material		**PA**
Flammability Class		**UL94 V-0**
Temperature Range		**-30°C/+105°C**
Cage Clamp		**Stainless Steel**
Wire Guard		**Cu**
Color		
Slade Grey		

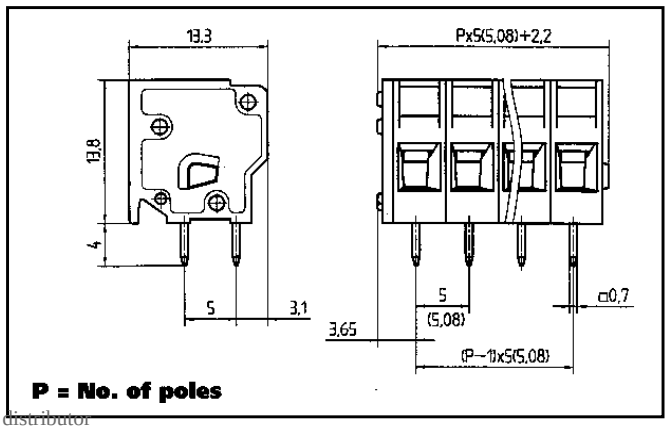

ED3101

1-n poles, Spacing

Ratings:
Rated Voltage
Rated Current
Wire Size
Test Voltage

Max. Rated Cross Section
Single Wire (solid)
Stranded Wire (flexible)
Stranded wire with Ferrules

Dimensions
Spacing
PCB Hole Diameter
Stripped Length

Materials
Insulating Material
Flammability Class
Temperature Range
Cage Clamp
Wire Guard

Color
Slade Grey

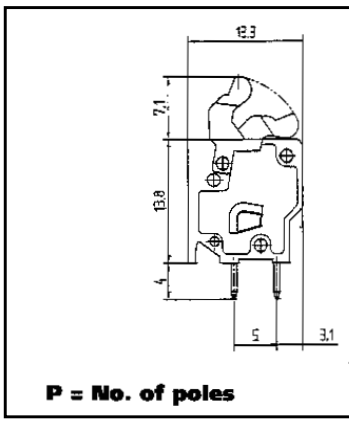

Downloaded from Elcodis.com electronic components distributor