THIS DRAWING IS UNPUBLISHED. RELEASED FOR PUBLICATION 20
© COPYRIGHT 20 BY TYCO ELECTRONICS CORPORATION. ALL RIGHTS RESERVED.

LOC	DIST
AA	00

REVISIONS

P	LTR	DESCRIPTION	DATE	DRN	APVD
	C	ECO-07-022131	02NOV07	LAM	JW

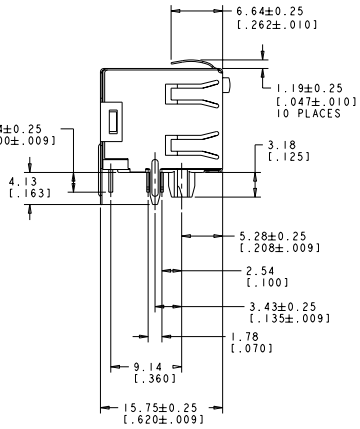

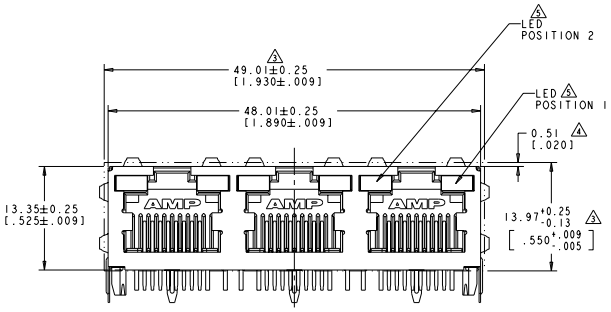

1. MATERIAL: HOUSING - THERMOPLASTIC, BLACK, UL94V-0.
   TERMINALS - .36[.014] THICK PHOSPHOR BRONZE PLATED WITH 3.81µm [.000150] MINIMUM THICK BRIGHT TIN-LEAD IN SOLDER AREA, 1.27µm [.000050] MINIMUM GOLD IN LOCALIZED PLATE AREA. ENTIRE TERMINAL PLATED WITH 1.27µm [.000050] MINIMUM THICK NICKEL.
   SHIELD - 0.196[.0077] THICK COPPER ZINC ALLOY, PREPLATED WITH 1.27µm [.000050] MINIMUM SATIN NICKEL WITH 2.03µm [.000080] MINIMUM TIN POST DIPPED ON PCB TABS.
   LIGHT EMITTING DIODE (LED) - DIFFUSED EPOXY LENS
   0.51 X 0.51 [.020 X .020] CARBON STEEL WIREFRAME LEADS PLATED WITH 8.89µm[.000350] TIN/COPPER OVER 2.03µm[.000080] SILVER OVER 1.02µm[.000040] NICKEL UNDERPLATE OVER 2.03µm [.000080] COPPER UNDERPLATE.
2. JACK CAVITY CONFORMS TO FCC RULES AND REGULATIONS PART 68, SUBPART F.

3 SUGGESTED PANEL OPENING DIMENSIONS.

4 SUGGESTED CLEARANCE BETWEEN TOP OF CONNECTOR AND TOP OF PANEL OPENING.

5 SEE TABLE FOR COLOR OF LEDS AND NUMBER REQUIRED.

6. THIS MODULAR JACK WITH INTEGRATED LED IS NOT IR REFLOW SOLDERING PROCESS COMPATIBLE.

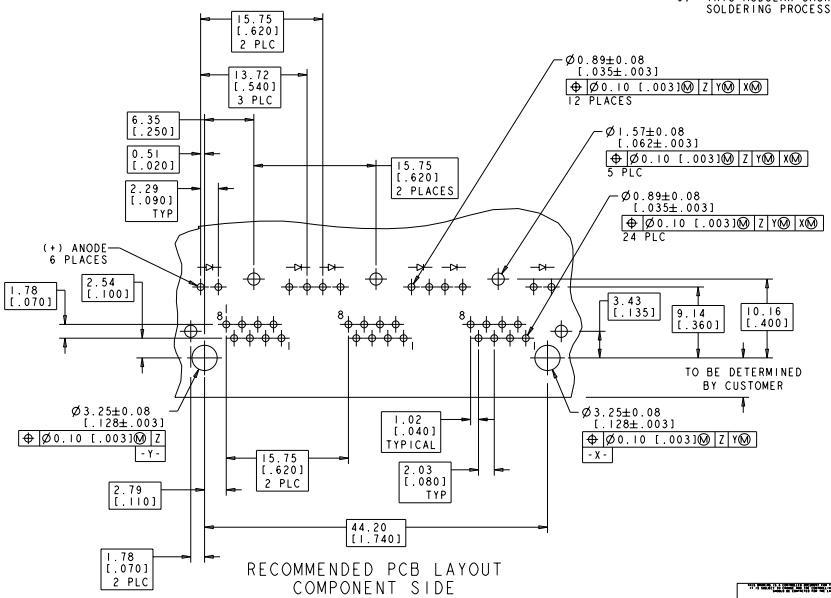

RECOMMENDED PCB LAYOUT
COMPONENT SIDE

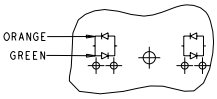

LED CURRENT DIAGRAM
1116132-7 ONLY

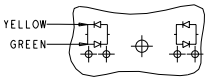

LED CURRENT DIAGRAM
1116132-8 ONLY

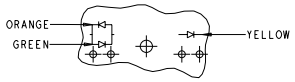

LED CURRENT DIAGRAM
1116132-9 ONLY
OBSOLETE

ORANGE/GREEN	YELLOW	1116132-9
YELLOW/GREEN	YELLOW/GREEN	1116132-8
ORANGE/GREEN	ORANGE/GREEN	1116132-7
YELLOW	YELLOW	1116132-6
GREEN	GREEN	1116132-5
GREEN	YELLOW	1116132-4
YELLOW	-	1116132-3
	GREEN	1116132-2
YELLOW	GREEN	1116132-1
POSITION 2	POSITION 1	PART NUMBER
INDICATOR COLOR		

DRN D.J. AHERN 29JUL98	Tyco Electronics Harrisburg, PA 17105-3608	
CHK J. WESTMAN 13OCT07		
APPR E. LAUBER 29JUL98	NAME INVERTED MODULAR JACK ASSEMBLY, 1 X 3, SHIELDED, PANEL GROUND TABS, LED	
DIMENSIONS: MM [INCH]	PRODUCT SPEC 108-1163-4	
TOLERANCES UNLESS OTHERWISE SPECIFIED: 0 PLC ±- 1 PLC ±0 2 PLC ±0.13[.005] 3 PLC ±0.1 4 PLC ±0.5 ANGLES ±0°	APPLICATION SPEC 114-2154	
MATERIAL SEE NOTE 1	WEIGHT -	SIZE A1 / CAGE CODE / DRAWING NO 00779 C-1116132 / RESTRICTED TO -
FINISH SEE NOTE 1	CUSTOMER DRAWING	SCALE 4:1 / SHEET 1 OF 1 / REV C

AMP 4805 REV 31MAR2000
Pro/ENGINEER DRAWING

Downloaded from Elcodis.com electronic components distributor