THIS DRAWING IS UNPUBLISHED. RELEASED FOR PUBLICATION: .19 -
© COPYRIGHT 19 BY AMP INCORPORATED. ALL RIGHTS RESERVED.

SIZE	DIST	REVISIONS				
A4	22	LTR	DESCRIPTION	DATE	DWN	APVD
		D	ADDED -1 PER EC 0515-0446-02	14JAN03	DD	EL

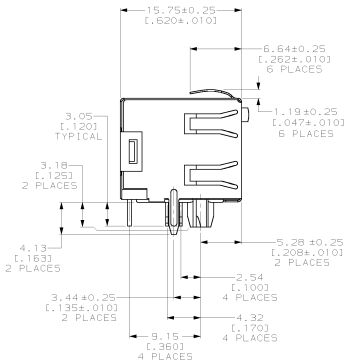

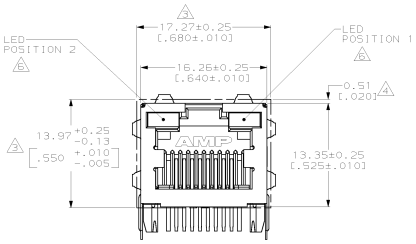

1. MATERIAL:
HOUSING - HIGH TEMPERATURE THERMOPLASTIC, BLACK, UL94V-0.
TERMINALS - 0.36[.014] THICK PHOS BRONZE PLATED WITH 3.81µm[.000150] MINIMUM THICK BRIGHT TIN LEAD IN SOLDER AREA. 1.27µm [.000050] MINIMUM GOLD IN LOCALIZED PLATE AREA. ENTIRE TERMINAL PLATED WITH 1.27µm [.000050] MINIMUM THICK NICKEL.
SHIELD - 0.196[.0077] THICK COPPER ZINC ALLOY PREPLATED WITH 1.27µm[.000050] MINIMUM SATIN NICKEL WITH 2.03µm[.000080] MINIMUM TIN-LEAD POST DIPPED ON PCB GROUND TABS.
LIGHT EMITTING DIODE (LED) - DIFFUSED EPOXY LENS, 0.51 x 0.51[.020 x .020] CARBON STEEL WIREFRAME LEADS PREPLATED WITH 2.29µm[.000090] SILVER OVER 1.02µm[.000040] NICKEL UNDERPLATE OVER 2.03µm[.000080] COPPER UNDERPLATE.
POST-PLATED WITH 6.35-13.97µm[.000250-.000550] THICK TIN-LEAD.

2. JACK CAVITY CONFORMS TO FCC RULES AND REGULATIIONS PART 68, SUBPART F.

3. SUGGESTED PANEL OPENING DIMENSIONS.

4. SUGGESTED CLEARANCE BETWEEN TOP OF CONNECTOR AND TOP PANEL OPENING.

5. 0.051[.002] WHITE POLYESTER INSULATOR APPLIED TO BACK OF HOUSING.

6. SEE TABLE FOR COLOR OF LEDS AND NUMBER REQUIRED.

7. THIS MODULAR JACK WITH INTEGRATED LED IS NOT IR REFLOW SOLDERING PROCESS COMPATIBLE.

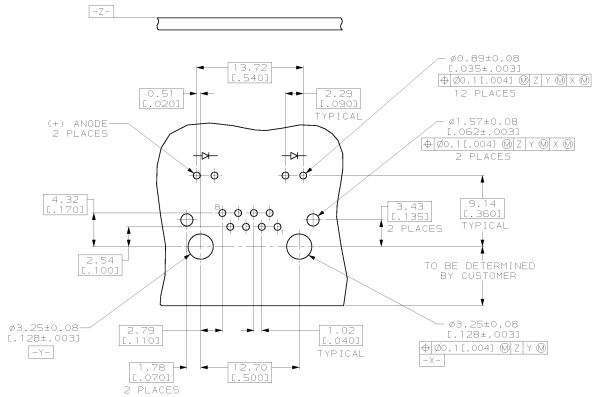

SUGGESTED PRINTED CIRCUIT BOARD LAYOUT
(COMPONENT SIDE)

INDICATOR COLOR		PART NUMBER
GREEN	GREEN	1116173-5
GREEN	YELLOW	1116173-4
YELLOW	GREEN	1116173-1
POSITION 2	POSITION 1	

THIS DRAWING IS A CONTROLLED DOCUMENT.

DIMENSIONS, mm [INCHES]

TOLERANCES UNLESS OTHERWISE SPECIFIED:
0 PLC ±-
1 PLC ±1
2 PLC ±0.25[.01]
3 PLC ±0.13[.005]
4 PLC ±-
ANGLES ±-

MATERIAL 1
FINISH 1

DWN 264058 STRAUSSER
CHK 264058 E. LAURER
APVD E. LAURER
PRODUCT SPEC 108-1163-4
APPLICATION SPEC 114-2154
WEIGHT -
CUSTOMER DRAWING

AMP
AMP Incorporated
Harrisburg, PA 17105-3608

NAME
INVERTED MODULAR JACK ASSEMBLY, 1X1, SHIELDED, PANEL GROUND, LED, INSULATOR, .120" CUTOFF

SIZE A1 | CAGE CODE 00779 | DRAWING NO C-1116173

SCALE 4:1 | SHEET 1 OF 1 | REV D

Downloaded from Elcodis.com electronic components distributor