THIS DRAWING IS UNPUBLISHED. RELEASED FOR PUBLICATION -.- .
© COPYRIGHT - BY TYCO ELECTRONICS CORPORATION. ALL RIGHTS RESERVED.

LOC	DIST
AA	22

REVISIONS

P	LTR	DESCRIPTION	DATE	DWN	APVD
	A	REV PER EC 0S11-0201-04	07JUN2005	LV	SF

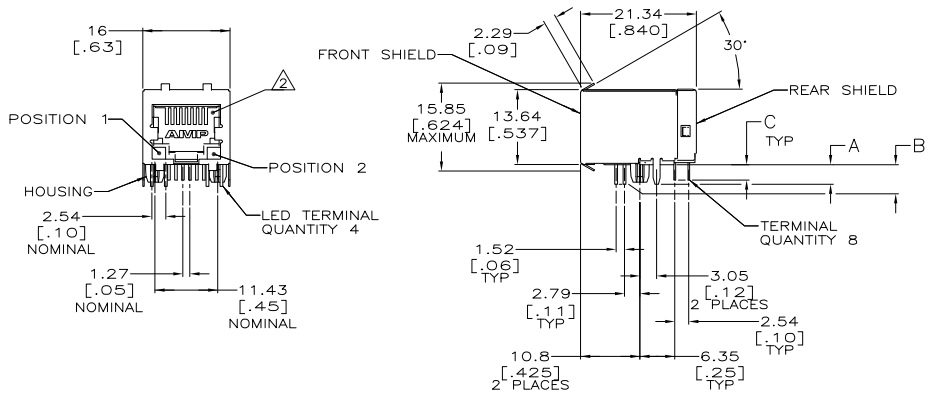

1. MATERIAL: HOUSING – HIGH TEMPERATURE NYLON THERMOPLASTIC, BLACK, UL94V–0.
TERMINALS – 0.33[.013] THICK PHOS BRONZE PLATED WITH 1.27μm[.000050] MINIMUM THICK HARD GOLD IN LOCALIZED AREA AND 3.81μm[.000150] MINIMUM THICK MATTE TIN IN SOLDER AREA OVER 1.27μm[.000050] MINIMUM THICK NICKEL UNDERPLATE.
SHIELD – 0.254[.010] THICK COPPER ALLOY PLATED WITH 2.03μm[.000080] MINIMUM BRIGHT TIN OVER 1.27μm [.000050] MINIMUM NICKEL.
LIGHT EMITTING DIODE (LED) – DIFFUSED EPOXY LENS, 0.51 x 0.51[.020 x .020] CARBON STEEL WIREFRAME LEADS PREPLATED WITH 8.89 μm[.0003500] THICK Sn/Cu OVER 2.03 μm[.000080] THICK Ag OVER 1.02μm[.000040] THICK Cu OVER 3.56 μm[.000140] THICK Ni OVER 1.02μm[.000040] Cu UNDERPLATE

2. JACK CAVITY CONFORMS TO FCC RULES AND REGULATIONS, PART 68 SUBPART F.

3. USE #30 DRILL BIT OR 3.25mm DRILL BIT WHEN PRODUCING THESE PCB HOLES.

4. THIS MODULAR JACK WITH INTEGRATED LEDS IS NOT IR REFLOW SOLDERING PROCESS COMPATIBLE.

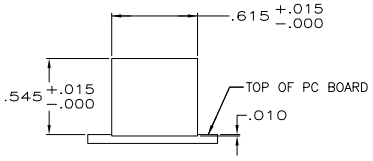

SUGGESTED PANEL CUTOUT

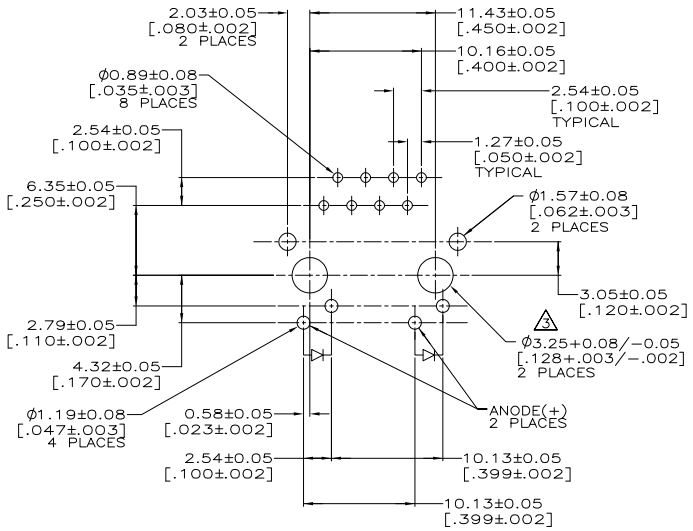

SUGGESTED PC BOARD LAYOUT
COMPONENT SIDE
SCALE 4:1

C	B	A	POSITION 1	POSITION 2	PART NUMBER
2.79[.11]	3.56[.14]	4.06[.16]	GREEN	GREEN	5569564–4
2.79[.11]	3.56[.14]	4.06[.16]	GREEN	YELLOW	5569564–1

LED COLOR

THIS DRAWING IS A CONTROLLED DOCUMENT.

DIMENSIONS: mm[inches]

TOLERANCES UNLESS OTHERWISE SPECIFIED:

0 PLC	± –
1 PLC	± –
2 PLC	± 0.25[.01]
3 PLC	± 0.13[.005]
4 PLC	± –
ANGLES	± –

MATERIAL 1 FINISH 1

DWN L. VARELA – DOCK5 07JUN2005
CHK J. WESTMAN 07JUN2005
APVD S. FLICKINGER 07JUN2005
PRODUCT SPEC 108–1163
APPLICATION SPEC 114–2154
WEIGHT –

Tyco Electronics Corporation
Harrisburg, PA 17105–3608

NAME MODULAR JACK ASSEMBLY, 8 POSITION, RIGHT ANGLE, LOW PROFILE, PANEL GROUND WITH LEDS

SIZE A2 CAGE CODE 00779 DRAWING NO C–5569564 RESTRICTED TO –

CUSTOMER DRAWING SCALE 2:1 SHEET 1 OF 1 REV A

5569564

AMP 1471–9 REV 31MAR2000

Downloaded from Elcodis.com electronic components distributor