THIS DRAWING IS UNPUBLISHED. RELEASED FOR PUBLICATION -.-.-
© COPYRIGHT - - BY TYCO ELECTRONICS CORPORATION. ALL RIGHTS RESERVED.

LOC	DIST
AG	00

REVISIONS

P	LTR	DESCRIPTION	DATE	DRN	APVD
	A	RELEASED PER EC 0512-0501-04	07JAN05	BM	MY

1. HOUSING-MATERIAL : LIQUID-CRYSTAL-POLYMER.
2. CONTACT-MATERIAL : PHOS. BRONZE.
3. LATCH-MATERIAL : STAINLESS STEEL
4. CONTACT-PLATE: 0.00508[.000200] MIN. MATTE TIN OVER 0.00127 [.000050] MIN NICKEL.
5. IN ADDITION TO THOSE RECOMMENDED "SIMM" P.C. BOARD DIMENSIONS AND TOLERANCES SHOWN, ALL JEDEC SPECIFICATIONS APPLY AS SHOWN ON MO-116, ISSUE A.
6. RECOMMENDED MATING S.I.M.M. TAB METALLURAGY: BASE METAL-COPPER. PLATING TO BE 0.00762[.000300] MIN TIN/LEAD OVER 0.00127[.000050] MIN NICKEL.

△ 'S' IDENTIFIER LOCATED APPROXIMATELY AS SHOWN.

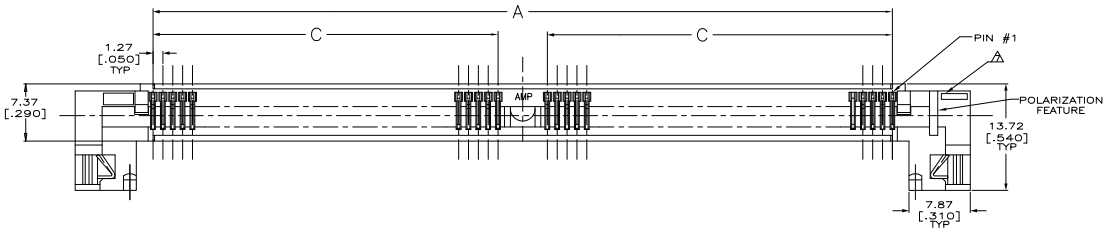

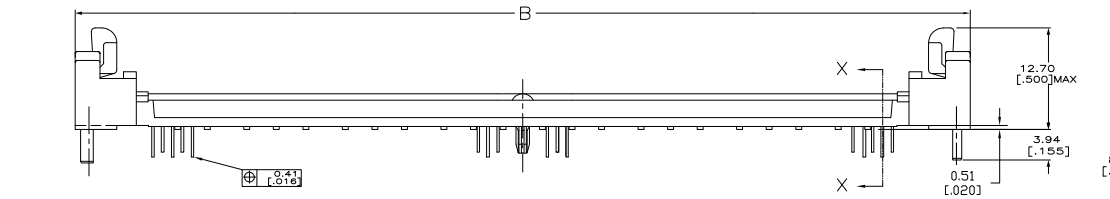

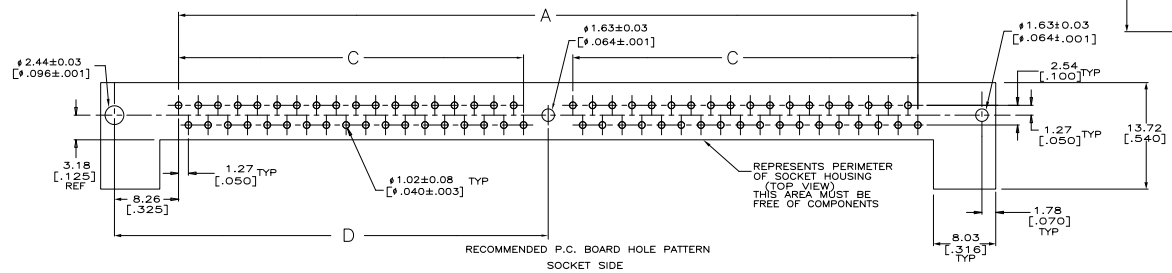

RECOMMENDED P.C. BOARD HOLE PATTERN
SOCKET SIDE

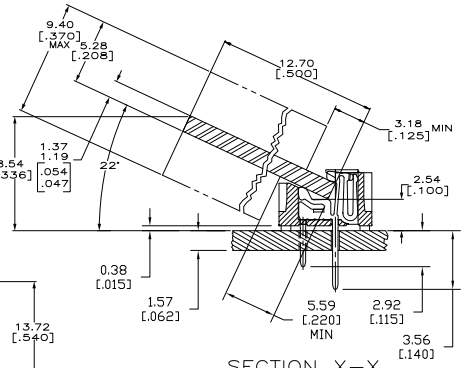

SECTION X-X
SCALE 5:1
(BOARD SHOWN FOR REF ONLY)

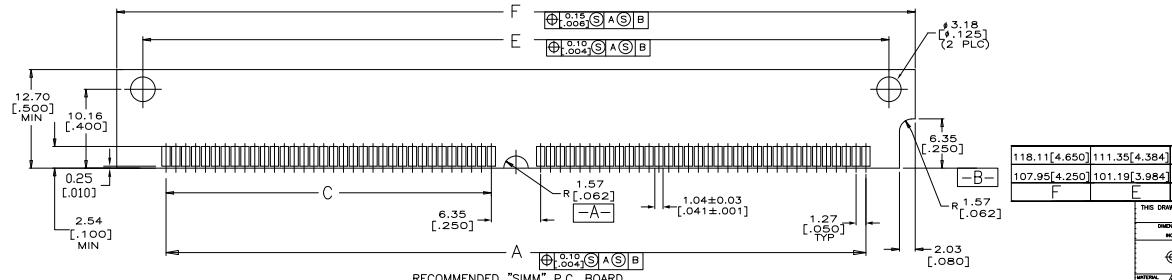

RECOMMENDED "SIMM" P.C. BOARD

118.11[4.650]	111.35[4.384]	60.96[2.400]	49.53[1.950]	125.48[4.940]	105.41[4.150]	80	5822134-4
107.95[4.250]	101.19[3.984]	55.88[2.200]	44.45[1.750]	115.32[4.540]	95.25[3.750]	72	5822134-3
F	E	D	C	B	A	NO. OF POS	PART NO

THIS DRAWING IS A CONTROLLED DOCUMENT.

DIMENSIONS: INCHES

TOLERANCE UNLESS OTHERWISE SPECIFIED: 0 PLC ± – ; 1 PLC ± – ; 2 PLC ± – ; 3 PLC ± – ; 4 PLC ± 0.13[.005] ; ANGLES ± –

MATERIAL: HOUSING △1 LIQUID CRYSTAL POLYMER; CONTACT △2 PHOS. BRONZE; LATCH △3 STAINLESS STEEL

FINISH: HOUSING: NATURAL; CONTACT △4 TIN/LEAD; LATCH △3

DR B.MCMASTER 01JAN05; DE M.YEOMANS 01JAN05; APD M.YEOMANS 01JAN05

PRODUCT SPEC –; APPLICATION SPEC –; WEIGHT –

Tyco Electronics Corporation, Harrisburg, Pa 17105-3608

NAME: CONNECTOR, MICRO-EDGE, .050, LP, TIN PL, W/METAL LATCH

SIZE A1; CAGE CODE 00779; DRAWING NO C-5822134; RESTRICTED TO –

CUSTOMER DRAWING; SCALE 4:1; SHEET 1 OF 1; REV A

AMP 4805 REV 31MR2000

Downloaded from Elcodis.com electronic components distributor