SWITCHCRAFT, INC. 5555 N. Elston Ave.
Chicago, IL 60630 • 773 792-2700 • FAX: 773 792-2129
www.switchcraft.com

PC MOUNT BNC COMMERCIAL RECEPTACLES

Part Number
BNCRAPC2000

Part Number
BNCSTPC2000

Recommended PC Board Layout BNCSTPC (Component Side)

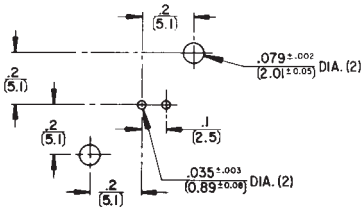

Recommended PC Board Layout BNCRAPC (Component Side)

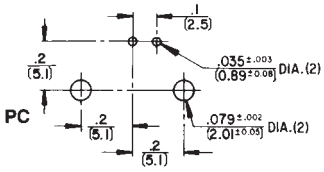

Panel Cutout (Bushing Mount)

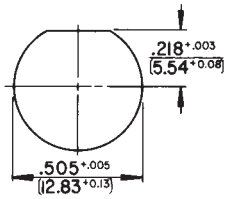

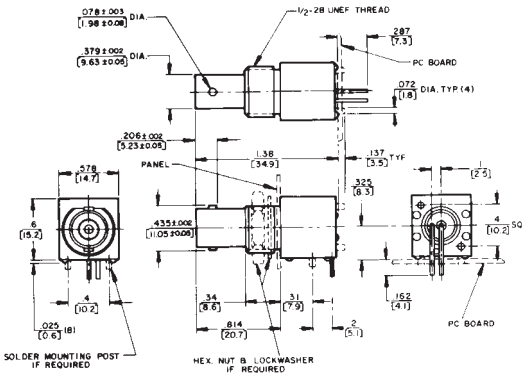

Series BNCSTPC and BNCRAPC

DIMENSIONS ARE FOR REFERENCE ONLY $\frac{\text{Inch}}{(\text{mm})}$

NOTE: Contact your Switchcraft Representative for price and delivery.

Downloaded from Elcodis.com electronic components distributor