THIS DRAWING IS UNPUBLISHED. RELEASED FOR PUBLICATION
© COPYRIGHT – BY TYCO ELECTRONICS CORPORATION. ALL RIGHTS RESERVED.

LOC	DIST	REVISIONS					
GP	00	P	LTR	DESCRIPTION	DATE	DRN	APVD
			A	REVISED PER EC 0S13-0030-05	07SEP05	BM	SB

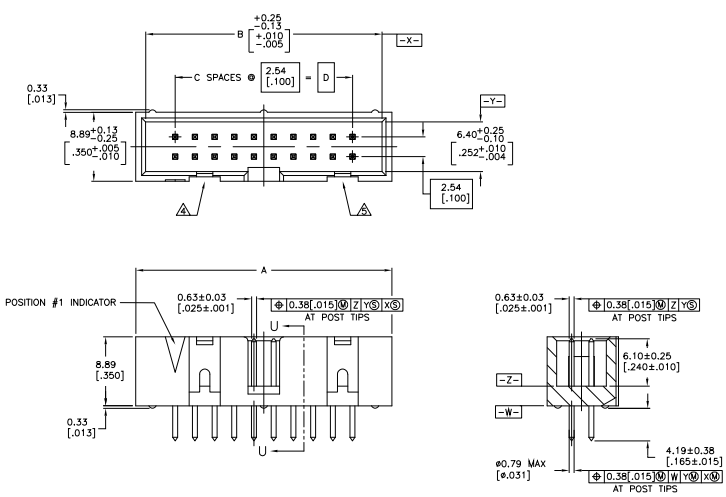

SECTION U–U

1. HOUSING: PBT, UL94V–0, COLOR: (SEE TABLE).
   POSTS: PHOSPHOR BRONZE.
2. POSTS: 0.00076[.000030] MIN GOLD ON MATING AREA, 0.00254[.000100] MIN TIN ON SOLDER END, ALL OVER 0.00127[.000050] MIN NICKEL ON ENTIRE POST.
3. DATUMS S & T TO BE ESTABLISHED BY CUSTOMER.
4. NO KEYING SLOT ON THIS END FOR 6, 10 & 14 POSITION ASSEMBLIES.
5. NO KEYING SLOT ON THIS END FOR 6 & 10 POSITION ASSEMBLIES.

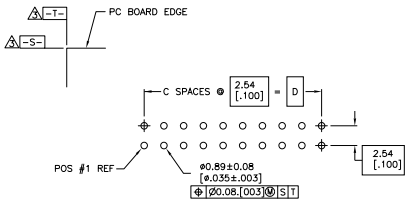

RECOMMENDED PC BOARD LAYOUT
(VIEWED FROM CONNECTOR SIDE)

HOUSING COLOR	D	C	B	A	NO OF POS	PART NUMBER
BLUE	78.74 [3.100]	31	86.36 [3.400]	88.90 [3.500]	64	3–1761679–7
	73.66 [2.900]	29	81.28 [3.200]	83.82 [3.300]	60	3–1761679–6
	60.96 [2.400]	24	68.58 [2.700]	71.12 [2.800]	50	3–1761679–5
	48.26 [1.900]	19	55.88 [2.200]	58.42 [2.300]	40	3–1761679–3
	43.18 [1.700]	17	50.80 [2.000]	53.34 [2.100]	36	3–1761679–2
	40.64 [1.600]	16	48.26 [1.900]	50.80 [2.000]	34	3–1761679–1
	30.48 [1.200]	12	38.10 [1.500]	40.64 [1.600]	26	2–1761679–9
	27.94 [1.100]	11	35.56 [1.400]	38.10 [1.500]	24	2–1761679–8
	22.86 [.900]	9	30.48 [1.200]	33.02 [1.300]	20	2–1761679–7
	17.78 [.700]	7	25.40 [1.000]	27.94 [1.100]	16	2–1761679–6
	15.24 [.600]	6	22.86 [.900]	25.40 [1.000]	14	2–1761679–5
	10.16 [.400]	4	17.78 [.700]	20.32 [.800]	10	2–1761679–3
	5.08 [.200]	2	12.70 [.500]	15.24 [.600]	6	2–1761679–1
BLACK	30.48 [1.200]	12	38.10 [1.500]	40.64 [1.600]	26	1761679–9
	10.16 [.400]	4	17.78 [.700]	20.32 [.800]	10	1761679–3

THIS DRAWING IS A CONTROLLED DOCUMENT.

DIMENSIONS: mm
TOLERANCES UNLESS OTHERWISE SPECIFIED: 0 PLC ± – ; 1 PLC ± – ; 2 PLC ± – ; 3 PLC ± 0.13[.005] ; 4 PLC ± – ; ANGLES ± –
MATERIAL 1
FINISH 2

DRN B.CRISAMORE/DTI 23MAY05
CHK S.BOLASH 23MAY05
APVD M.WALMSLEY 23MAY05
PRODUCT SPEC –
APPLICATION SPEC –
WEIGHT –
CUSTOMER DRAWING

Tyco Electronics Corporation
Harrisburg, Pa 17105–3608

NAME: HEADER ASSEMBLY, VERTICAL, LOW PROFILE, IDC

SIZE A1 | CAGE CODE 00779 | DRAWING NO C-1761679 | RESTRICTED TO –
SCALE 4:1 | SHEET 1 OF 1 | REV A

AMP 4805 REV 31MAR2000

Downloaded from Elcodis.com electronic components distributor