PRODUCT NUMBER	SPLIT SLEEVE MATERIAL	SHELL COLOR	FLANGE	NOTES
74885–001	PB	BLUE	W/FLANGE	OBSOLETE USE 99103–P0001
74885–002	ZIRCONIA	BLUE	W/FLANGE	OBSOLETE USE 99103–Z0001
74885–003	PB	GREEN (APC)	W/FLANGE	OBSOLETE USE 99103–PA001
74885–004	ZIRCONIA	GREEN (APC)	W/FLANGE	OBSOLETE USE 99103–ZA001
74885–005	ZIRCONIA	METALLIC	W/FLANGE	OBSOLETE USE 99103–ZM001
74885–006	PB	METALLIC	W/FLANGE	OBSOLETE USE 99103–PM001
74885–007	PB	BLUE	W/O FLANGE	–
74885–008	ZIRCONIA	BLUE	W/O FLANGE	–
74885–009	PB	GREEN (APC)	W/O FLANGE	–
74885–010	ZIRCONIA	GREEN (APC)	W/O FLANGE	–

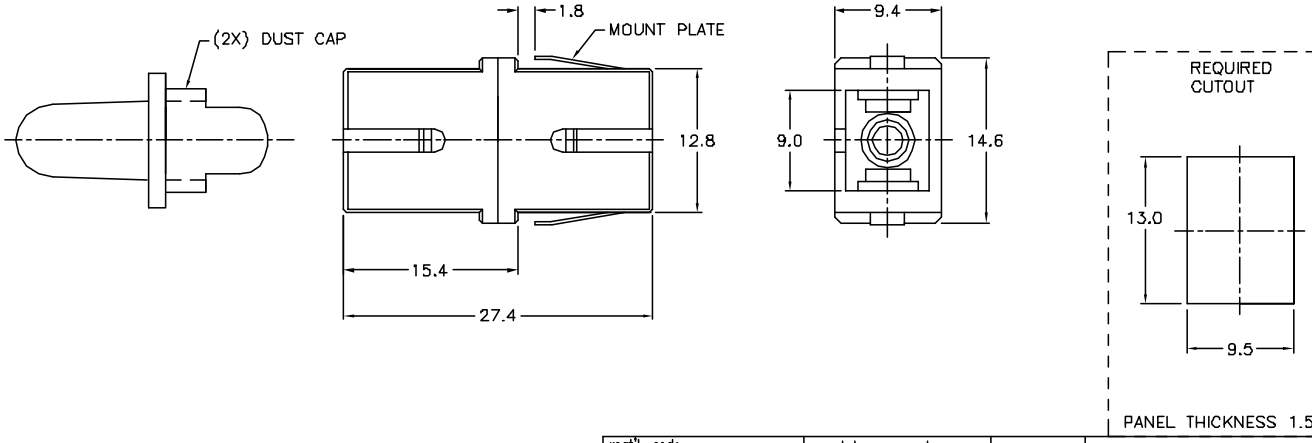

NOTES:
1. JIS–C–5973–1990 COMPATIBLE.
2. SNAP–IN OR FASTENER MOUNTING.
3. SHELL W/FLANGES.

ltr	ecn no	dr	date
A	V90759	NPP	21JAN99
B	V00928	RSN	11APR00
C	V01215	RSN	5/22/00
D	V01901	JJK	7/25/00
E	V02683	JJK	11/21/00
F	V20625	JJK	4/9/02

mat'l. code A/R UL94 V–0 RATED

tolerances unless otherwise specified: linear, angles — NOMINALS ONLY UNLESS NOTED

dr	N. PETRILLO	21JAN99
engr	N. PETRILLO	21JAN99
chr	NPP	13APR99
appd	N. PETRILLO	13APR99

CUSTOMER COPY

projection

mm

scale N/A

Electronics FCI www.fciconnect.com

title ADAPTER ,SC/SC

product family FIBER OPTICS

code –

size A4

dwg no 74885

sheet 1 of 1

sheet index | revision sheet

cage code 22526

ACAD

PDM: Rev:F STATUS:Released Printed: Jun 10, 2009

Tous droits strictement reservés. Reproduction ou communication a des tiers interdite sous quelque forme que ce soit sans autorisation ecrite du proprietaire. Propriete de c FCI. Droits de reproduction FCI.

All rights strictly reserved. Reproduction or issue to third parties in any form whatsoever is not permitted without written authority from the proprietor. Property of FCI. Copyright FCI.

Downloaded from Elcodis.com electronic components distributor