LC ADAPTER P/N	COLOR	SPLIT SLEEVE MATERIAL	LOGO
106127-1400	BLUE	Zr	MX
106127-1430*			
106127-1420 (SEE NOTE 2)			
106127-0410	BEIGE	Ph. Bronze	
106127-1450	GREEN	Zr	
106127-1600	BLUE/METAL DOOR	Zr	
106127-0610	BEIGE/METAL DOOR	Ph. Bronze	
106127-1650	GREEN/METAL DOOR	Zr	
106127-1410	BLACK	Zr	
106127-9410*	AQUA	Ph. Bronze	NONE
106127-9010**			
106127-1950*	GREEN	Zr	
106198-2400	BLUE		
106127-9020**			
106198-2410	BEIGE	Ph. Bronze	
106127-9000**			
106127-1610	AQUA/METAL DOOR	Ph. Bronze	MX
106127-9030	AQUA	Zr	NONE

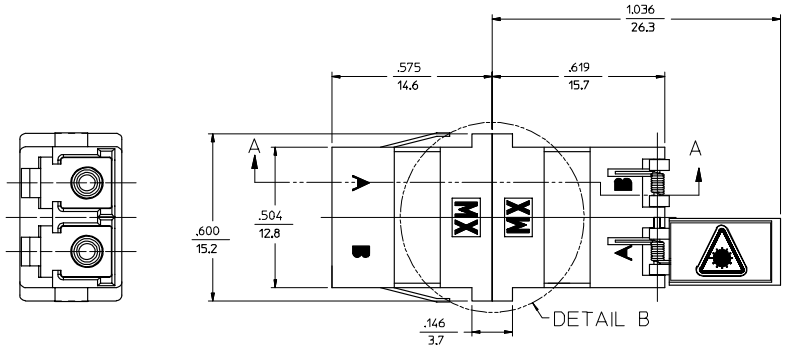

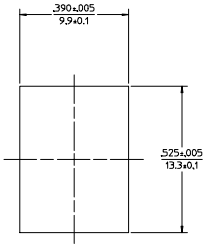

RECOMMENDED MOUNTING CUTOUT
FOR .063 MAX. THICK PANEL

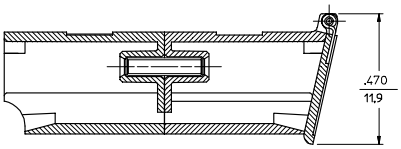

SECTION A-A

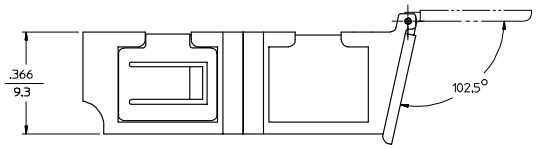

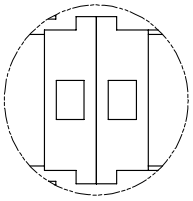

DETAIL B
(NO LOGO VERSION)

NOTES:

1. DUST CAPS ARE NOT SHOWN. BUT INCLUDED.

2. FOR P/N 106127-1420 LASER WARNING LABEL IS SUPPLIED UNATTACHED AND SHALL BE INSTALLED BY CUSTOMER.

*3. P/NS 106127-9410, 106127-1950 AND 106127-1430 ARE BULK PACKED IN QUANTITIES OF 100pcs.

**4. P/NS 106127-9000, 106127-9010 AND 106127-9020 ARE FIRST INDIVIDUALLY PACKED IN CLEAR NON-MARKED BAGS AND THEN BULK PACKED IN QUANTITIES OF 100pcs.

ENTER DESCRIPTION
EC NO: MF2007-0426 2007/01/08
DRWN:KPEVZNER 2007/01/09
CHKD: 2007/01/11
APPR:J GUMIN
DESCRIPTION
REV C

QUALITY SYMBOLS
▼=0
▽=0

GENERAL TOLERANCES (UNLESS SPECIFIED)

	mm	INCH
4 PLACES	± ---	± ---
3 PLACES	± ---	± ---
2 PLACES	± ---	± ---
1 PLACE	± ---	± ---
ANGULAR ±1/2°		

DRAFT WHERE APPLICABLE MUST REMAIN WITHIN DIMENSIONS

DIMENSION STYLE: IN/MM
SCALE: 3:1
DESIGN UNITS: INCH
THIRD ANGLE PROJECTION

DRAWN BY: PGIBLIN DATE: 2005/10/05
CHECKED BY DATE
APPROVED BY DATE

TITLE: LC DUPLEX ADAPTER W/ SHUTTERS (SMALL FLANGE/SC FOOT PRINT)

molex MOLEX INCORPORATED

MATERIAL NO.: SEE TABLE
DOCUMENT NO.: SD-106127-YYY0
SHEET NO.: 1 OF 1
SIZE: C

THIS DRAWING CONTAINS INFORMATION THAT IS PROPRIETARY TO MOLEX INCORPORATED AND SHOULD NOT BE USED WITHOUT WRITTEN PERMISSION

tb_frame_C_P_ME_T
Rev. D 2004/04/02

Downloaded from Elcodis.com electronic components distributor