CSF-210

samtec

TIGER EYE™ IDC

(1,27mm) .050"

FFSD, FFMD SERIES

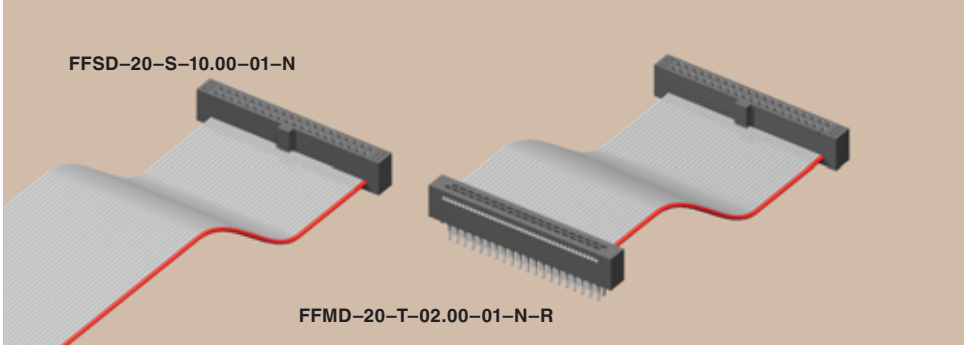

TIGER EYE™ FLAT IDC WIRE CABLES

SPECIFICATIONS

Mates with:
FTS, FTSH, EHF, SHF, ESHF

For complete specifications see www.samtec.com?FFSD

FFSD

FILE NO. E111594

Insulator Material: PBT
Contact: BeCu
Plating: 10µ" (0,25µm) Au over 50µ" (1,27µm) Ni on contact area; Sn over 50µ' (1,27µm) Ni on balance
Wire: 30 AWG
Current Rating: 0.5A
Operating Temp Range: -40°C to +105°C
Lead Size Accepted: (0,41mm) .016" SQ
Contact Resistance: 15 mΩ maximum delta from initial
Insertion Depth: (2,64mm) .104" to (3,17mm) .125"
Insertion Force: (Single contact only) 5oz (1,39N) avg.
Withdrawal Force: (Single contact only) 3oz (0,83N) avg.
RoHS Compliant: Yes

Note: This Series is non-standard, non-returnable.

SPECIFICATIONS

Mates with:
FLE*, SFMC*

For complete specifications see www.samtec.com?FFMD

FFMD

FILE NO. E111594

Insulator Material: Black Glass Filled Polyester
Terminal: BeCu
Plating: Sn over 50µ" (1,27µm) Ni
Wire: 30 AWG
Current Rating: 0.5A
Operating Temp Range: -40°C to +105°C
RoHS Compliant: Yes

***Note:** Standard FFMD callout will not mate with FLE, SFMC. Must use gold plated callouts. (See drawing on web.) When mated with a socket, Wire 1 mates with Pin 2; Wire 2 mates wth Pin 1, etc.

Note: This Series is non-standard, non-returnable.

TYPE STRIP – NO. PINS PER ROW – END OPTION – OVERALL LENGTH – 01 – OPTION – OTHER OPTION

–05, –08, –10, –13, –17, –20, –25
(Call for other sizes)

–"XX.XX"
= Assembled Length

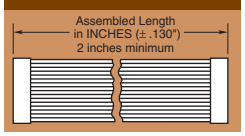

–N
= Notch Polarization (FFSD only)

–S = Single End

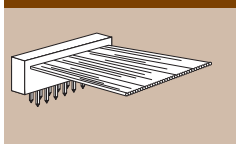

–D = Double End

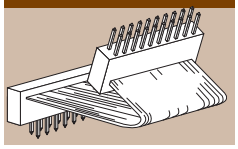

–T = Transfer End (FFMD only)

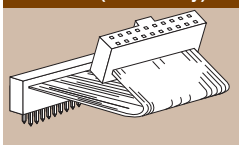

Leave blank for –S and –D End Options. For –T End Option Specify "–N" (Socket has notch polarization) (FFMD only)

–RW = Reverse Wiring

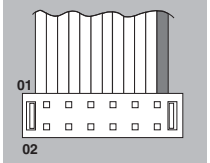

Blue or black wire opposite position #1. 1

–D "XX" = Daisy Chain

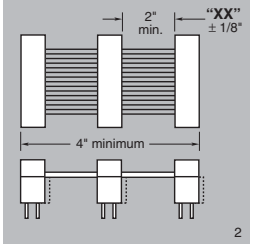

2

–R = Reverse

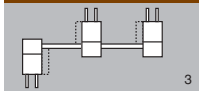

3

–M = Middle Reverse

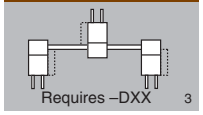

Requires –DXX 3

–O = Outside Reverse

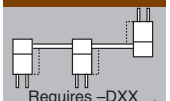

Requires –DXX 3

–SR = Strain Relief

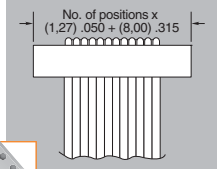

Not available with –S, –O, –M, –R or –DXX

RUGGEDIZED by SAMTEC

• Strain relief option

FFSD = Socket Strip

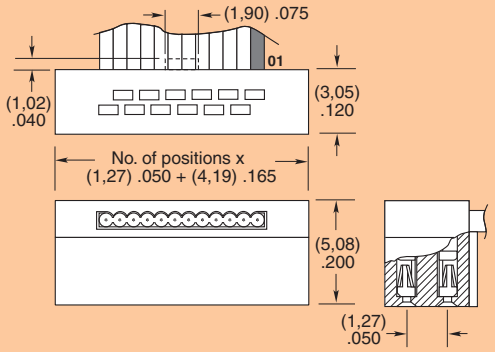

FFMD = Terminal Strip

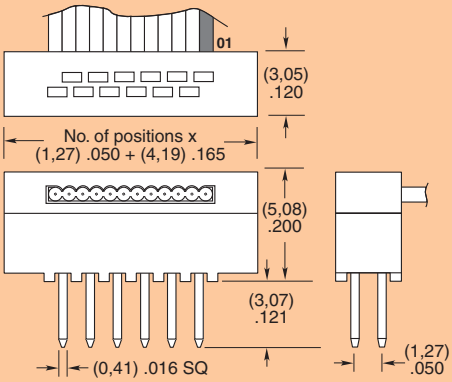

Due to technical progress, all designs, specifications and components are subject to change without notice.

WWW.SAMTEC.COM

SAMTEC USA • Tel: 1-800-SAMTEC-9 or 812-944-6733 **SAMTEC SILICON VALLEY** • Tel: 408-395-5900 **SAMTEC SOUTHERN CALIFORNIA** • Tel: 1-800-726-8329
SAMTEC AMERICA LATINA COMERCIO EXTERIOR LTDA • Tel: (+55 31) 3786 3227 **SAMTEC UNITED KINGDOM** • Tel: 44 01236 739292 **SAMTEC GERMANY** • Tel: +49 (0) 89 / 89460-0
SAMTEC FRANCE • Tel: 33 01 60 95 06 60 **SAMTEC ITALY** • Tel: 39 039 6890337 **SAMTEC NORDIC/BALTIC** • Tel: +46-84477280 **SAMTEC BENELUX** • Tel: 44 01236 739292 **SAMTEC ISRAEL** • Tel: 972-3-7526600
SAMTEC INDIA • Tel: +91-80-3272 1612 **SAMTEC ASIA PACIFIC** • Tel: 65 6745-5955 **SAMTEC JAPAN** • Tel: 045-475-1385 **SAMTEC CHINA** • Tel: 86-21-61103766 **SAMTEC TAIWAN** • Tel: 886-2-2735-6109
SAMTEC HONG KONG • Tel: 852-2804 4458 **SAMTEC KOREA** • Tel: 82-31-717-5685 **SAMTEC ANZ** • Tel: 613 9512 7747 **SAMTEC SOUTH AFRICA** • Tel: 27 11 452 8112

Downloaded from Elcodis.com electronic components distributor