Tous droits strictement reserves. Reproduction ou communication a des tiers interdite sous quelque forme que ce soit sans autorisation ecrite du proprietaire. Propriete de c FCI. Droits de reproduction FCI.

All rights strictly reserved. Reproduction or issue to third parties in any form whatever is not permitted without written authority from the proprietor. Property of FCI. Copyright FCI.

PRODUCT NO.
10037901–XXXX0X

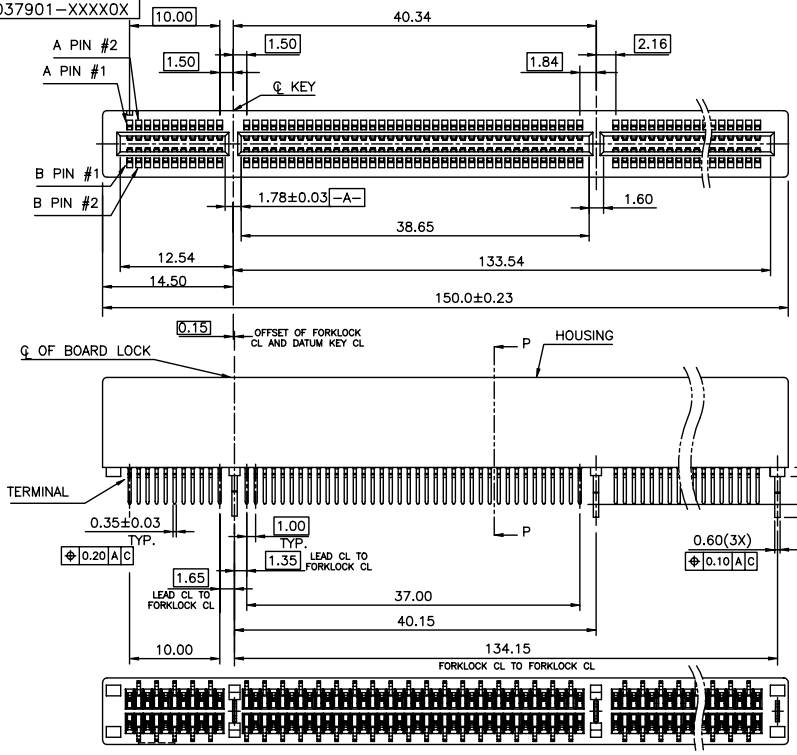

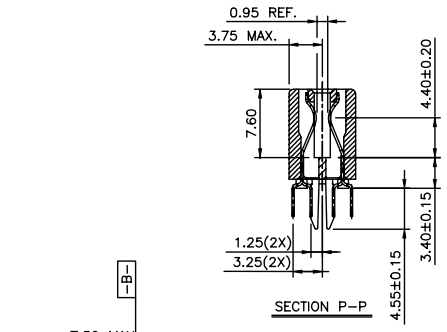

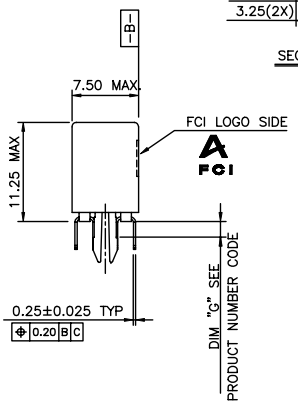

WITHOUT LATCHING TYPE

CONFIDENTIAL

mat'l. code				tolerances unless otherwise specified			CUSTOMER COPY	FCI www.fciconnect.com		
ltr	ecn no	dr	date		.X ± 0.30					
A	T04–0383	M W	10/06/04	linear	.XX ± 0.20		projection	title	PCI EXPRESS SUPER SLOT CARD EDGE 280P ASS'Y	
B	T05–0012	M W	01/13/05		.XXX ± 0.10					
C	T05–0210	M W	09/15/05	angles	0° ±2°					
				dr	MAGGIE WU	01/30/04	MM	product family	EDGE CARD	code TWN
				engr	R Y LIU	01/30/04		size	dwg no	
				chr	PAUL WANG	01/30/04	scale 2:1	A4	10037901	sheet 1 of 4
				appd	J. HSIA	01/30/04				

sheet index	revision	C	A
	sheet	1	2
A	C		
3	4		

cage code 22526

ACAD

PDM: Rev:C

STATUS: Released

Printed Aug 02, 2008

Downloaded from Elcodis.com electronic components distributor

Tous droits strictement reserves. Reproduction ou communication a des tiers interdite sous quelque forme que ce soit sans autorisation ecrite du proprietaire. Propriete de c FCI. Droits de reproduction FCI.

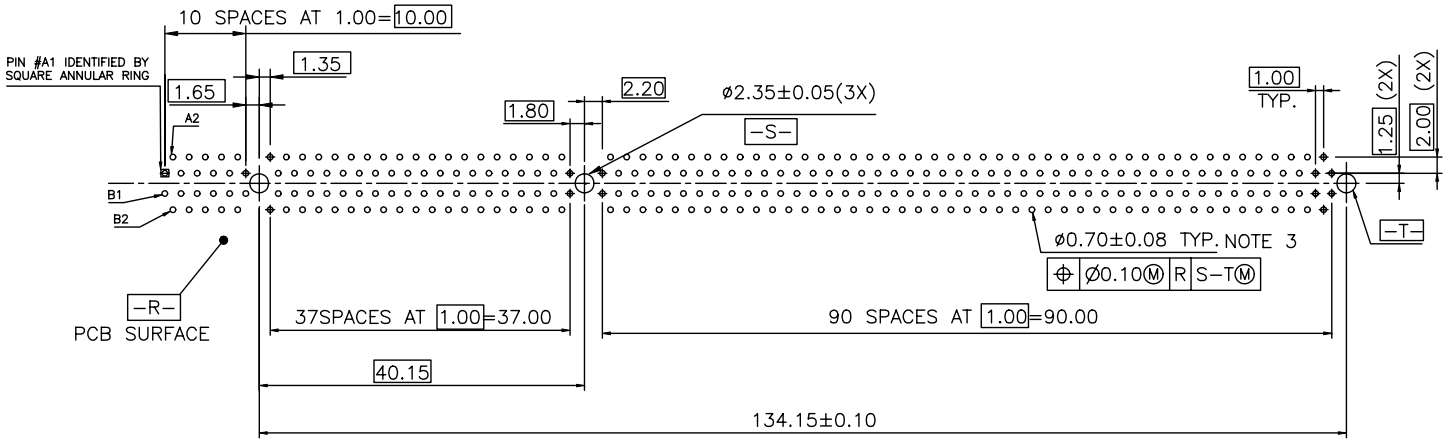

MOTHER BOARD FOOTPRINT PATTERN
CONNECTOR SIDE SHOWN

CONFIDENTIAL

mat'l. code				tolerances unless otherwise specified		CUSTOMER COPY	FCI www.fciconnect.com
ltr	ecn no	dr	date		.X ±		
A				linear	.XX ±	projection	title: PCI EXPRESS SUPER SLOT CARD EDGE 280P ASS'Y
					.XXX ±		
				angles	0° ±2°		
				dr MAGGIE WU	01/30/04	MM	product family: EDGE CARD; code: TWN
				engr R Y LIU	01/30/04		size: A4; dwg no: 10037901; sheet 2 of
				chr PAUL WANG	01/30/04	scale 1.5:1	
				appd J. HSIA	01/30/04		
sheet index	revision sheet						cage code 22526

ACAD

PDM: Rev:C

STATUS: Released

Printed Aug 02, 2008

All rights strictly reserved. Reproduction or issue to third parties in any form whatever is not permitted without written authority from the proprietor. Property of FCI. Copyright FCI.

Downloaded from Elcodis.com electronic components distributor

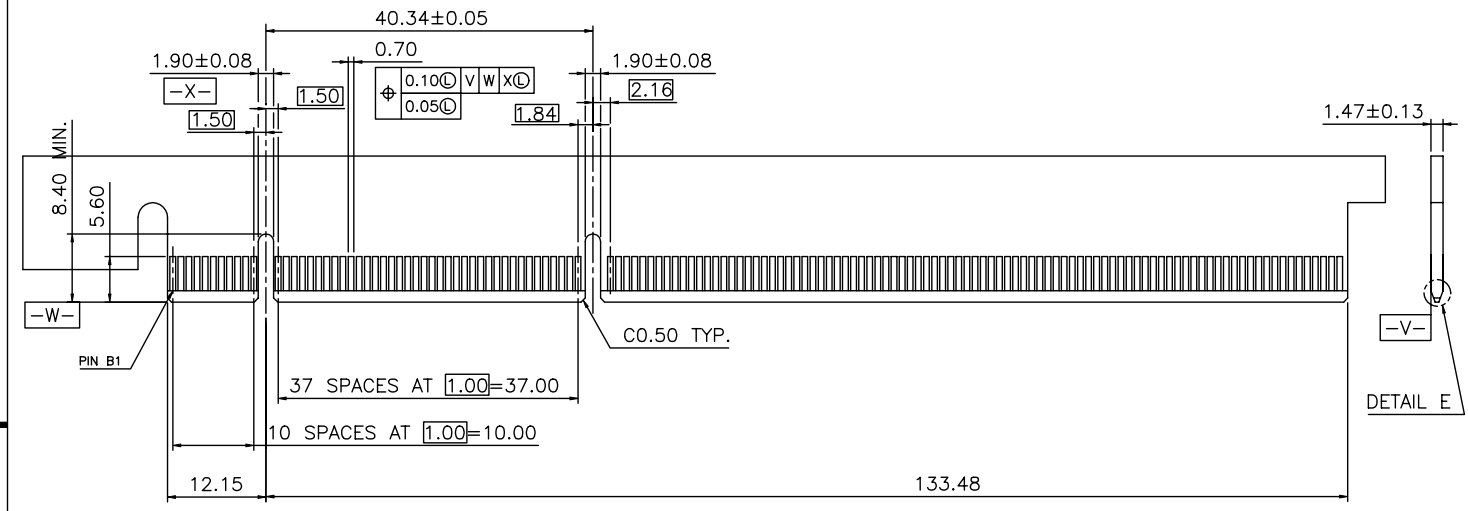

DAUGHTER CARD
PRIMARY (COMPONENT) SIDE

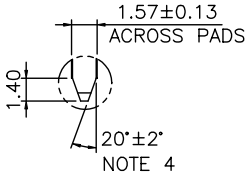

SCALE 2:1
DETAEL E

CONFIDENTIAL

mat'l. code				tolerances unless otherwise specified			CUSTOMER COPY	FCI www.fciconnect.com	
ltr	ecn no	dr	date	linear	.X ±		projection	title	
A					.XX ±			PCI EXPRESS SUPER SLOT CARD EDGE 280P ASS'Y	
					.XXX ±				
				angles	0° ±2°				
				dr	MAGGIE WU	01/30/04	MM	product family EDGE CARD	code TWN
				engr	R Y LIU	01/30/04		size A4 dwg no 10037901	sheet 3 of
				chr	PAUL WANG	01/30/04	scale 1.5:1		
				appd	J. HSIA	01/30/04			
sheet index	revision sheet								

cage code 22526

ACAD PDM: Rev:C STATUS: Released Printed: Aug 02, 2008

Tous droits strictement reserves. Reproduction ou communication a des tiers interdite sous quelque forme que ce soit sans autorisation ecrite du propietaire. Propriete de c FCI. Droits de reproduction FCI.

All rights strictly reserved. Reproduction or issue to third parties in any form whatever is not permitted without written authority from the proprietor. Property of FCI. Copyright FCI.

Downloaded from Elcodis.com electronic components distributor

NOTES:

1.MATERIAL:

HOUSING: HIGH TEMPERATURE NYLON, GLASS FILLED UL94V–0 RATED. SUITABLE FOR IR REFLOW.

TERMINAL: COPPER ALLOY

PLATING: 50u" NICKEL UNDERPLATE ALL OVER
CONTACT AREA PLATING – SEE PRODUCT NUMBER CODE
SOLDER TAIL: TIN OR TIN/LEAD (90/10) – SEE PRODUCT NUMBER CODE 100u" MIN. OVER 50u" NICKEL

METAL BOARD LOCKS: COPPER ALLOY

FINISH: 100u" TIN OR TIN/LEAD (90/10) OVER 50u" NICKEL UNDERPLATE SEE PRODUCT NUMBER CODE

2.PRODUCT SPECIFICATION: GS–12–233

③THE HORIZONTAL AXIS FOR THE HOLE PATTERN IS ESTABLISHED BY A LINE THROUGH THE CENTER OF THE TWO ø2.35 HOLES. THE VERTICAL AXIS IS 90° TO THE HORIZONTAL AXIS, THROUGH THE CENTER OF DATUM Z.

④CHAMFER EDGES MUST BE FREE OF CUTTING BURRS.

5.RoHS COMPATIBLE PRODUCT SPECIFICATIONS

a – PLATING:
– "LF" MEANS THE PRODUCT IS LEAD–FREE, 2um MINIMUM MATTE TIN OVER 1.27um MINIMUM NICKEL UNDERPLATE.

b – MANUFACTURING PROCESS COMPATIBILITY
– THE HOUSING WILL WITHSTAND EXPOSURE TO 260°C±5°C SOLDER BATH TEMPERATURE FOR 5 SECONDS IN A REFLOW SOLDER APPLICATION WITH A 1.6mm MIN THICK CIRCUIT BOARD.

PRODUCT NUMBER CODE

10037901 –X X X X X X □□

HOUSING COLOR OPTIONS
1–BLACK

PEGS OPTIONS
1–METAL BOARD LOCKS

LATCHING OPTIONS
0–WITHOUT LATCHING

TERMINAL PLATING OPTIONS
0–50u" Ni UNDERPLATE
30u" Au CONTACT AREA
100u" TIN TAIL AREA ----- COMPATIBLE RoHS
1–50u" Ni UNDERPLATE
15u" Au CONTACT AREA
100u" TIN TAIL AREA ----- COMPATIBLE RoHS
2–50u" Ni UNDERPLATE
GOLD FLASH CONTACT AREA
100u" TIN TAIL AREA ----- COMPATIBLE RoHS
3–50u" Ni UNDERPLATE
30u" Au CONTACT AREA
100u" TIN/LEAD TAIL AREA ----- INCOMPLIANT RoHS
4–50u" Ni UNDERPLATE
15u" Au CONTACT AREA
100u" TIN/LEAD TAIL AREA ----- INCOMPLIANT RoHS
5–50u" Ni UNDERPLATE
GOLD FLASH CONTACT AREA
100u" TIN/LEAD TAIL AREA ----- INCOMPLIANT RoHS

PACKAGING OPTIONS
T–TRAY PACKAGING

LEAD FREE OPTION
LEAVE BLANK FOR TERMINAL PLATING 3,4,5
"LF" FOR TERMINAL PLATING OPTION 0,1,2

TAIL LENGTH OPTIONS

	DIM "D"	PCB THICKNESS	BOARD LOCKS DIM "G"
0	$2.30^{+0.25}_{-0.13}$	1.56±0.10	1.70±0.15
1	$3.10^{+0.25}_{-0.13}$	2.36±0.10	2.50±0.15
2	2.54±0.25	1.56±0.10	1.70±0.15

CONFIDENTIAL

mat'l. code				tolerances unless otherwise specified			CUSTOMER COPY	FCI www.fciconnect.com	
ltr	ecn no	dr	date		.X ±				
C				linear	.XX ±		projection	title	PCI EXPRESS SUPER SLOT CARD EDGE 280P ASS'Y
					.XXX ±				
				angles	0° ±2°				
				dr	MAGGIE WU	01/30/04	MM	product family EDGE CARD	code TWN
				engr	R Y LIU	01/30/04		size dwg no	
				chr	PAUL WANG	01/30/04	scale	A4 10037901	sheet 4 of
				appd	J. HSIA	01/30/04	1:1		
sheet index	revision sheet								

cage code 22526

ACAD

PDM: Rev:C

STATUS: Released

Printed Aug 02, 2008

Tous droits strictement reserves. Reproduction ou communication a des tiers interdite sous quelque forme que ce soit sans autorisation ecrite du proprietaire. Propriete de c FCI. Droits de reproduction FCI.

All rights strictly reserved. Reproduction or issue to third parties in any form whatever is not permitted without written authority from the proprietor. Property of FCI. Copyright FCI.

Downloaded from Elcodis.com electronic components distributor