THIS DRAWING IS UNPUBLISHED. RELEASED FOR PUBLICATION ,19 .
© COPYRIGHT 19 BY AMP INCORPORATED. ALL RIGHTS RESERVED.

LOC	DIST	REVISIONS					
ES	00	P	LTR	DESCRIPTION	DATE	DWN	APVD
			B	REVISED(ECR-05-014095)	11OCT05	B.W.	S.Y.

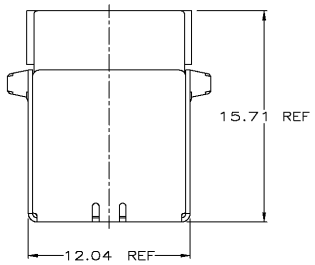

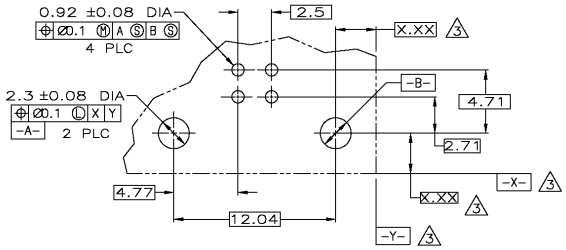

PC BOARD MOUNTING DIMENSIONS 4

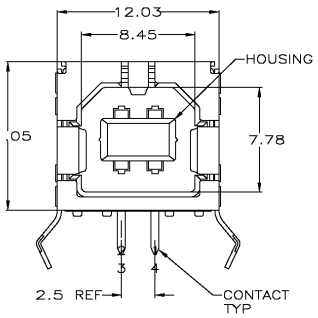

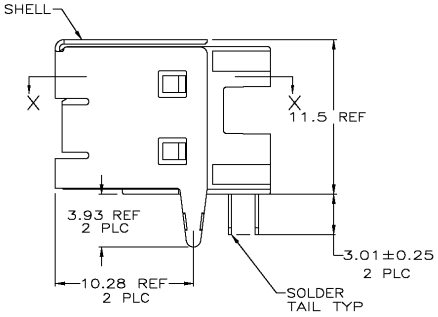

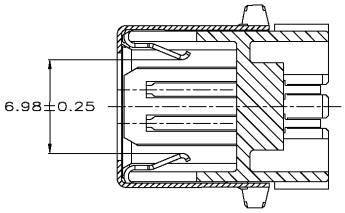

SECTION X-X

1 MATERIAL:
SHELL & CONTACTS: COPPER ALLOY.
HOUSING: UL 94V-0 RATED, THERMOPLASTIC, BLACK.

2 PLATING:
CONTACTS: 0.076μm MINIMUM GOLD OVER 0.76μm MINIMUM PALLADIUM-NICKEL ON MATING AREA.
3.8μm MINIMUM MATTE TIN ON SOLDER TAILS.
BOTH OVER 1.27μm MINIMUM NICKEL.
CONTACT ALTERNATE PLATING: 0.76μm MIN GOLD ON MATING AREA, 3.8μm MIN MATTE TIN ON SOLDER TAILS, BOTH OVER 1.27μm MIN NICKEL.
SHELL: 2.0~5.0μm MINIMUM TIN.

3 DATUM AND BASIC DIMENSIONS ESTABLISHED BY CUSTOMER.

4 RECOMMENDED PC BOARD THICKNESS OF 1.57.

5 PLATING:
CONTACTS: 0.76μm MINIMUM GOLD ON MATING AREA,
3.8μm MINIMUM MATTE TIN ON SOLDER TAILS,
BOTH OVER 1.27μm MINIMUM NICKEL.
SHELL: 2.0~5.0μm MINIMUM TIN.

6 PLATING:
CONTACTS: 0.38μm MINIMUM GOLD ON MATING AREA,
3.8μm MINIMUM MATTE TIN ON SOLDER TAILS,
BOTH OVER 1.27μm MINIMUM NICKEL.
SHELL: 2.0~5.0μm MINIMUM TIN.

7 RECOMMEND:
MATING FORCE: 35N MAX.
UNMATING FORCE: 13N MIN.
RECOMMENDED MATING PLUG SHOULD MEET USB2.0 STANDARD.

PLATING	HIGH TEMPERATURE COMPATIBLE	HOUSING COLOR	PART NUMBER
6	NO	BLACK	292304-5
5	NO	BLACK	292304-4
2	YES	BLACK	292304-3
2	YES	NATURAL	292304-2
2	NO	BLACK	292304-1

THIS DRAWING IS A CONTROLLING DOCUMENT FOR AMP INCORPORATED. IF IN SUBJECT TO CHANGE AND THE CONTROLLING ENGINEERING ORGANIZATION SHOULD BE CONTACTED FOR THE LATEST REVISION.

DIMENSIONS: mm
TOLERANCES UNLESS OTHERWISE SPECIFIED:
0 PLC ±-
1 PLC ±-
2 PLC ±0.1
3 PLC ±-
4 PLC ±-
ANGLES ±-
MATERIAL 1
FINISH 2

DWN J.JIANG 23FEB04
CHK S.YAO 23FEB04
APVD T.SASAKI 23FEB04
PRODUCT SPEC —
APPLICATION SPEC —
WEIGHT —
CUSTOMER DRAWING

tyco Electronics
Tyco electronics coporation
Shanghai, P.R.China, 200233

NAME: RECEPTACLE ASSEMBLY, RIGHT ANGLE, 4 POSITION, THRU-HOLE, TYPE B UNIVERSAL SERIAL BUS, LEAD FREE VERSION

SIZE A2 | CAGE CODE 00779 | DRAWING NO C-292304
SCALE 5:1 | SHEET 1 OF 1 | REV B

292304

AMP 1471-9 REV 10/93 Translated 040217.101735 (YYMMDD.HHMMSS) from Computervision, Inc., Medusa Revision 12.2.51
25-MAR-95 07:51:58 FB001075/home/ssrv026d/dsk04/dept4023/amp34723/edmmod

Downloaded from Elcodis.com electronic components distributor