PRODUCT NO.
92192

REVISIONS				
REV	DESCRIPTION	ECN	BY	DATE
A	RELEASED	J30053	M.K	1/20/'93
B	REVISED	J40163	M.K	5/28/'94
C	REVISED	V40646	M.K	8/24/'94
D	REVISED	V40840	M.K	7/5/'94
E	REVISED	J40198	M.K	7/19/'94
F	REVISED	V32113	M.K	12/22/'94
G	REVISED	J40349	M.K	1/9/'95
H	REVISED (ADDED-05CAH, -13CA, -13CAH)	J70134	K.S	5/22/'97
J	REVISED (ADDED-12FA)	N90076	M.K	7/22/'99
M	REVISED (ADDED"LF")	N05-0260	M.Z	11/09/05
N	REVISED (ADD -12CAH)	N07-0026	DT	1/29/07

PRODUCT NO. 92192-XXXXX	STAND OFF(mm)	DIM "N" (mm)	PUSH ROD COLOR	HOLD DOWN	SHEET NO.
00AA	0	8	BLACK	NONE	NO.2
00AAH	0	8	BLACK	YES	
00CA	0	13	BLACK	NONE	
00CAH	0	13	BLACK	YES	
00CB	0	13	BLUE	NONE	
00CBH	0	13	BLUE	YES	
00CP	0	13	PURPLE	NONE	
00CPH	0	13	PURPLE	YES	
00FA	0	21	BLACK	NONE	
00FAH	0	21	BLACK	YES	
02CA	2	13	BLACK	NONE	NO.3
02CB	2	13	BLUE	NONE	
04CA	4	13	BLACK	NONE	
05CA	5	13	BLACK	NONE	
05CAH	5	13	BLACK	YES	
10AA	0	8	BLACK	NONE	NO.4
10AAH	0	8	BLACK	YES	
10CA	0	13	BLACK	NONE	
10CAH	0	13	BLACK	YES	
10CB	0	13	BLUE	NONE	
10CBH	0	13	BLUE	YES	
10CP	0	13	PURPLE	NONE	
10CPH	0	13	PURPLE	YES	
10FA	0	21	BLACK	NONE	
10FAH	0	21	BLACK	YES	
12CA	2	13	BLACK	NONE	NO.5
12CAH	2	13	BLACK	YES	
12CB	2	13	BLUE	NONE	
12FA	2	21	BLACK	NONE	
13CA	3	13	BLACK	NONE	
13CAH	3	13	BLACK	YES	
14CA	4	13	BLACK	NONE	
15CA	5	13	BLACK	NONE	

PRODUCT NO. 92192-XXXXX	STAND OFF(mm)	DIM "N" (mm)	PUSH ROD COLOR	HOLD DOWN	SHEET NO.
00AALF	0	8	BLACK	NONE	NO.2
00AAHLF	0	8	BLACK	YES	
00CALF	0	13	BLACK	NONE	
00CAHLF	0	13	BLACK	YES	
00CBLF	0	13	BLUE	NONE	
00CBHLF	0	13	BLUE	YES	
00CPLF	0	13	PURPLE	NONE	
00CPHLF	0	13	PURPLE	YES	
00FALF	0	21	BLACK	NONE	
00FAHLF	0	21	BLACK	YES	
02CALF	2	13	BLACK	NONE	NO.3
02CBLF	2	13	BLUE	NONE	
04CALF	4	13	BLACK	NONE	
05CALF	5	13	BLACK	NONE	
05CAHLF	5	13	BLACK	YES	
10AALF	0	8	BLACK	NONE	NO.4
10AAHLF	0	8	BLACK	YES	
10CALF	0	13	BLACK	NONE	
10CAHLF	0	13	BLACK	YES	
10CBLF	0	13	BLUE	NONE	
10CBHLF	0	13	BLUE	YES	
10CPLF	0	13	PURPLE	NONE	
10CPHLF	0	13	PURPLE	YES	
10FALF	0	21	BLACK	NONE	
10FAHLF	0	21	BLACK	YES	
12CALF	2	13	BLACK	NONE	NO.5
12CAHLF	2	13	BLACK	YES	
12CBLF	2	13	BLUE	NONE	
12FALF	2	21	BLACK	NONE	
13CALF	3	13	BLACK	NONE	
13CAHLF	3	13	BLACK	YES	
14CALF	4	13	BLACK	NONE	
15CALF	5	13	BLACK	NONE	

92192-X X X X X

- OPTIONAL HOLD DOWN — NONE : N O / H : YES
- PUSH ROD COLOR — A : BLACK / B : BLUE / P : PURPLE
- PUSH ROD LENGTH(DIM"N") — A: 8mm / C: 13mm / F: 21mm
- STAND OFF HEIGHT (DIM "M") — 0: NONE / 2: 2mm / 3: 3mm / 4: 4mm / 5: 5mm
- DIRECTION OF PUSH ROD — 0 : RIGHT / 1 : LEFT

SHEET INDEX	ISSUE	
	SH NO.	

TOLERANCES UNLESS OTHERWISE SPECIFIED — LINEAR — ANGLES

MAT —//— FINISH —//—

DR. M. Hasegawa 7/22/'99 — ENGR. M. Kojima 7/22/'99 — CHK — APPD

CUSTOMER COPY — THIRD ANGLE PROJ. — UNIT MM

TITLE 68P EJECTOR HEADER TYPE I / II / III MECHANISM ASSY

SCALE —//— SIZE C DWG. NO. 92192 REV N SHEET 1 OF 5

DF-003A REV D

DO NOT SCALE PRINT THIS INFORMATION IS CONFIDENTIAL AND IS DISCLOSED TO YOU ON CONDITION THAT NO FURTHER DISCLOSURE IS MADE BY YOU TO OTHER THAN FCI PERSONNEL WITHOUT WRITTEN AUTHORIZATION FROM FCI JAPAN K.K.

PDM: Rev:N STATUS: Released Printed: Oct 12, 2010

Downloaded from Elcodis.com electronic components distributor

PRODUCT NO.	
92192-00AA/00AALF	⚠
92192-00AAH/00AAHLF	⚠
92192-00CA/00CALF	⚠
92192-00CAH/00CAHLF	⚠
92192-00CB/00CBLF	⚠
92192-00CBH/00CBHLF	⚠
92192-00CP/00CPLF	⚠
92192-00CPH/00CPHLF	⚠
92192-00FA/00FALF	⚠
92192-00FAH/00FAHLF	⚠

REVISIONS				
REV	DESCRIPTION	ECN	BY	DATE
A	RELEASED	J30053	N.T	2/17/'93
B	REVISED	J40163	M.K	5/26/'94
C	REVISED	V40646	M.K	6/24/'94
D	REVISED	V40840	M.K	7/ 5/'94
E	REVISED	J40198	M.K	7/19/'94
F	REVISED	V32113	M.K	12/21/'94
G	REVISED	J40349	M.K	1/9/'94
H	REVISED	N05-0260	M.Z	11/09/05
N				

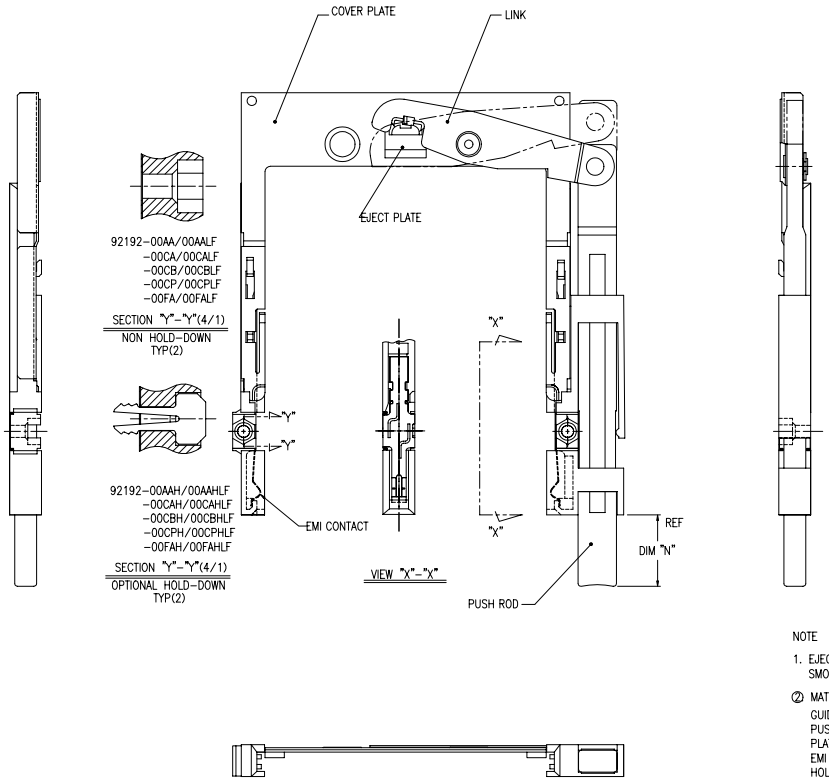

NOTE

1. EJECT PLATE MOVE ALONG INSIDE WALL OF COVER PLATE SMOOTHLY AFTER ASSEMBLING WITH HDR ASSY.

② MATERIAL

GUIDE	: POLYPHTHARAMID UL94V-0 BLACK
PUSH ROD	: FLAME RETARDANT UL94V-0 BLACK/BLUE
PLATE	: STAINLESS
EMI CONTACT	: PHOSPHOR BRONZE
HOLD-DOWN	: BRASS

③ FINISH

EMI CONTACT

UNDER PLATING : 2.0μm MIN. Ni

CONTACT AREA : 0.5μm MIN. Au

4. RECOMMENDED PCB HOLE (OPTIONAL HOLD-DOWN) : 2.3±0.1

SHEET INDEX	ISSUE					
	SH NO.					
TOLERANCES UNLESS OTHERWISE SPECIFIED	MAT SEE NOTE ②	DR J.Omata	DATE 12/21/94	CUSTOMER COPY	TITLE 68P EJECTOR HEADER TYPE I/II/III MECHANISM ASSY	
LINEAR	FINISH SEE NOTE ③	ENGR M.Kajiura	12/21/94	THIRD ANGLE PROJ		
ANGLES		CHK		UNIT MM INCH	SCALE 2/1	SIZE C	DWG. NO. 92192	REV N	SHEET 2 OF
		APPD							

PDM: Rev:N STATUS: Released Printed: Oct 12, 2010

Downloaded from Elcodis.com electronic components distributor

PRODUCT NO.	
92192-02CA/02CALF	H
92192-02CB/02CBLF	H
92192-04CA/04CALF	H
92192-05CA/05CALF	H
92192-05CAH/05CAHLF	G H

REVISIONS				
REV	DESCRIPTION	ECN	BY	DATE
A	RELEASED	J30053	N.T	2/17/'93
B	REVISED	J40163	M.K	5/26/'94
C	REVISED	V40840	M.K	7/ 5/'94
D	REVISED	J40198	M.K	7/19/'94
E	REVISED	V32113	M.K	12/20/'94
F	REVISED	J40349	M.K	1/9/'95
G	REVISED (ADDED-05CAH)	J70134	K.S	8/8/'97
H	REVISED (ADDED"LF")	N05-0260	MZ	11/09/05
N				

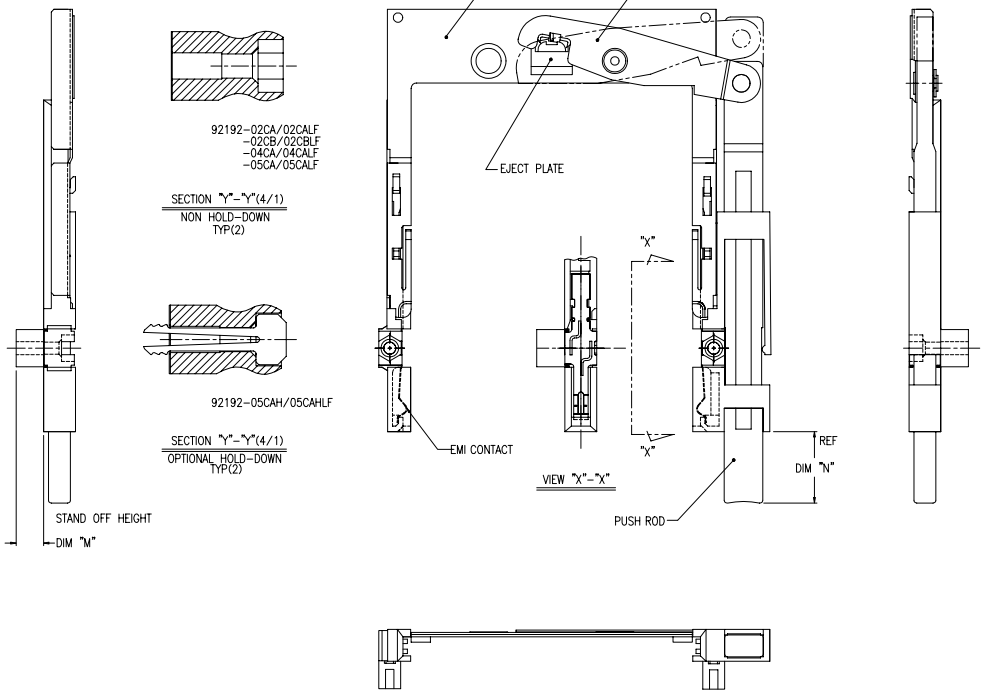

NOTE

1. EJECT PLATE MOVE ALONG INSIDE WALL OF COVER PLATE SMOOTHLY AFTER ASSEMBLING WITH HDR ASSY.

② MATERIAL

GUIDE : POLYPHTHARAMID UL94V-0 BLACK
PUSH ROD : FLAME RETARDANT UL94V-0 BLACK
PLATE : STAINLESS
EMI CONTACT : PHOSPHOR BRONZE
STAND OFF : ZINC ALLOYS DIE CASTING

③ FINISH

EMI CONTACT
UNDER PLATING : 2.0μm MIN. Ni
CONTACT AREA : 0.5μm MIN. Au
STAND OFF : 3~5μm Ni OVER 5~10μm Cu.

SHEET INDEX	ISSUE				
	SH NO.				
TOLERANCES UNLESS OTHERWISE SPECIFIED	MAT SEE NOTE ②	DR J. Ono	DATE 8/8/'97	CUSTOMER COPY	TITLE 68P EJECTOR HEADER TYPE I/II/III MECHANISM ASSY
LINEAR	FINISH SEE NOTE ③	ENGR K. Sugubi	8/8/'97	THIRD ANGLE PROJ	
ANGLES		CHK		UNIT MM INCH	SCALE 2/1 · SIZE C · DWG. NO. 92192 · REV N · SHEET 3 OF
		APPD			

PDM: Rev:N STATUS: Released Printed: Oct 12, 2010

Downloaded from Elcodis.com electronic components distributor

PRODUCT NO.	
92192-10AA/10AALF	H
92192-10AAH/10AAHLF	H
92192-10CA/10CALF	H
92192-10CAH/10CAHLF	H
92192-10CB/10CBLF	H
92192-10CBH/10CBHLF	H
92192-10CP/10CPLF	H
92192-10CPH/10CPHLF	H
92192-10FA/10FALF	H
92192-10FAH/10FAHLF	H

REVISIONS

REV	DESCRIPTION	ECN	BY	DATE
A	RELEASED	J30053	N.T	2/17/'93
B	REVISED	J40163	M.N	5/26/'94
C	REVISED	V40646	M.K	6/24/'94
D	REVISED	V40840	M.K	7/ 5/'94
E	REVISED	J40198	M.K	7/19/'94
F	REVISED	V32113	M.K	12/21/'94
G	REVISED	J40349	M.K	1/9/'95
H	REVISED	N05-0260	M.Z	11/09/05
N				

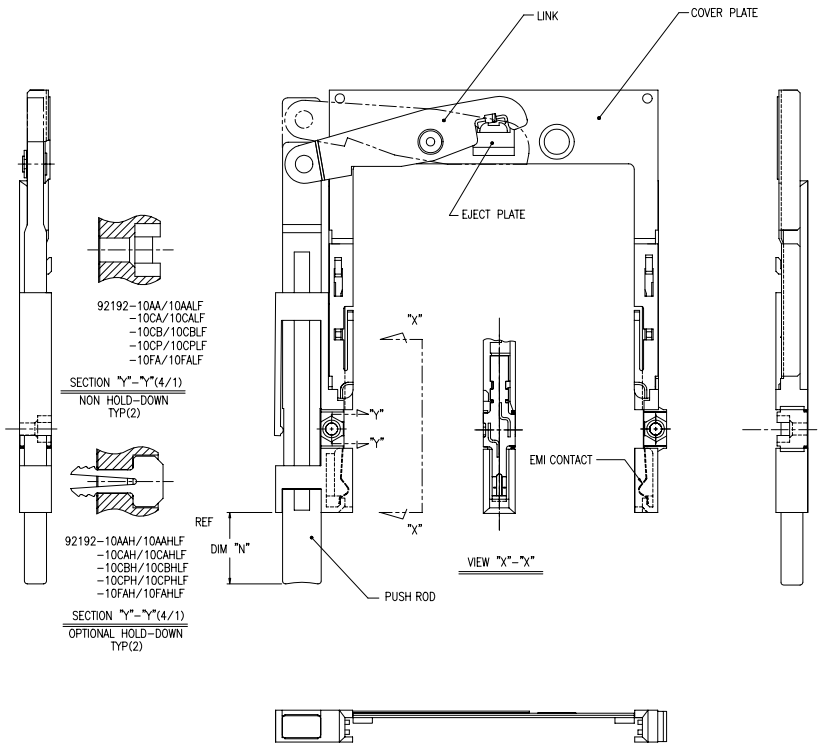

NOTE

1. EJECT PLATE MOVE ALONG INSIDE WALL OF COVER PLATE SMOOTHLY AFTER ASSEMBLING WITH HDR ASSY.

② MATERIAL

GUIDE	: POLYPHTHARAMID UL94V-0 BLACK
PUSH ROD	: FLAME RETARDANT UL94V-0 BLACK/BLUE
PLATE	: STAINLESS
EMI CONTACT	: PHOSPHOR BRONZE
HOLD-DOWN	: BRASS

③ FINISH

EMI CONTACT

UNDER PLATING : 2.0μm MIN. Ni

CONTACT AREA : 0.5μm MIN. Au

4. RECOMMENDED PCB HOLE (OPTIONAL HOLD-DOWN) : 2.3±0.1

SHEET INDEX	ISSUE				
	SH NO.				
TOLERANCES UNLESS OTHERWISE SPECIFIED	MAT SEE NOTE ②	DR J. Omata	DATE 12/21/'94	CUSTOMER COPY	TITLE 68P EJECTOR HEADER TYPE I/II/III MECHANISM ASSY
LINEAR		ENGR M. Kajiura	12/21/'94	THIRD ANGLE PROJ	
	FINISH SEE NOTE ③	CHK			
ANGLES		APPD		UNIT MM ~~INCH~~	SCALE 2/1 · SIZE C · DWG. NO. 92192 · REV N · SHEET 4 OF

PDM: Rev:N STATUS: Released Printed: Oct 12, 2010

Downloaded from Elcodis.com electronic components distributor

PRODUCT NO.	
92192-12CAH/12CAHLF	N
92192-12CB/12CBLF	J
92192-12FA/12FALF	J
92192-13CA/13CALF	J
92192-13CAH/12CAHLF	J
92192-14CA/14CALF	J
92192-15CA/15CALF	J

REVISIONS				
REV	DESCRIPTION	ECN	BY	DATE
A	RELEASED	J30053	N.T	2/17/'93
B	REVISED	J40163	M.K	5/26/'94
C	REVISED	V40840	M.K	7/ 5/'94
D	REVISED	J40198	M.K	7/19/'94
E	REVISED	V32113	M.K	12/20/'94
F	REVISED	J40349	M.K	1/9/'95
G	REVISED (ADDED-13CA -13CAH)	J70134	K.S	8/8/'97
H	REVISED (ADDED-12FA)	N90076	M.K	7/22/'99
J	REVISED (ADDED"LF")	N05-0260	MZ	11/09/05
N				

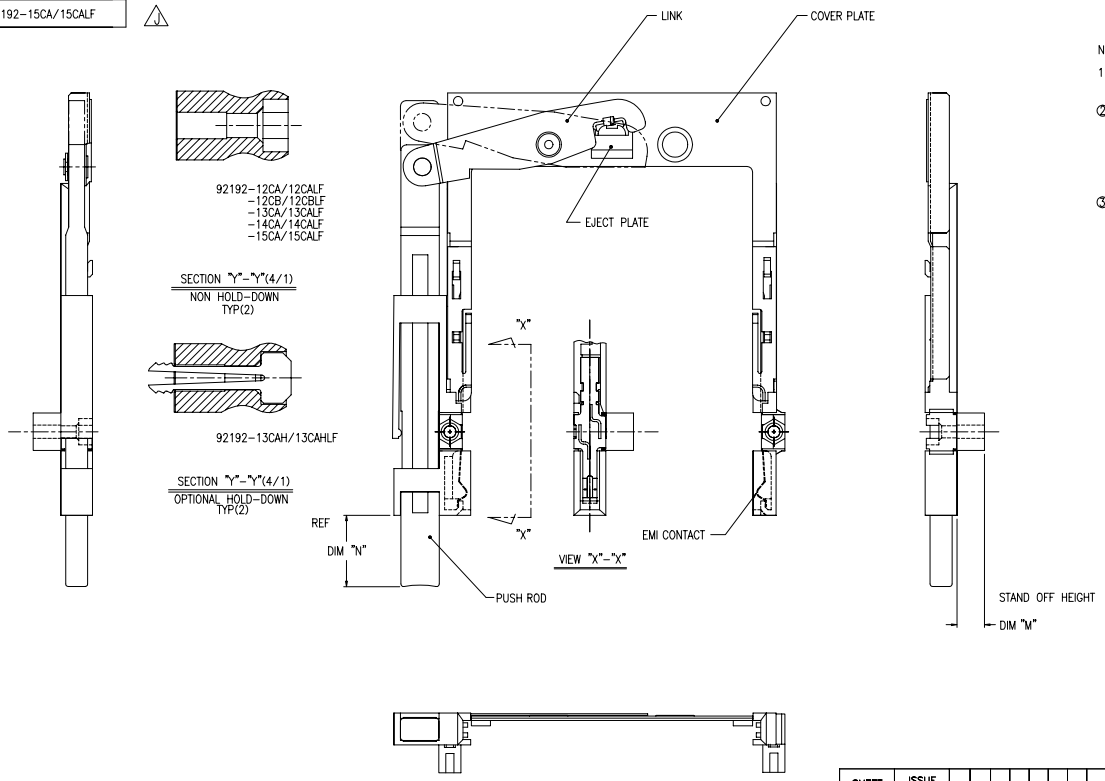

NOTE

1. EJECT PLATE MOVE ALONG INSIDE WALL OF COVER PLATE SMOOTHLY AFTER ASSEMBLING WITH HDR ASSY.

② MATERIAL

GUIDE	: POLYPHTHARAMID UL94V-0 BLACK
PUSH ROD	: FLAME RETARDANT UL94V-0 BLACK
PLATE	: STAINLESS
EMI CONTACT	: PHOSPHOR BRONZE
STAND OFF	: ZINC ALLOYS DIE CASTING

③ FINISH

EMI CONTACT

UNDER PLATING	: 2.0μm MIN. Ni
CONTACT AREA	: 0.5μm MIN. Au
STAND OFF	: 3~5μm Ni OVER 5~10μm Cu.

SHEET INDEX	ISSUE					
	SH NO.					
TOLERANCES UNLESS OTHERWISE SPECIFIED		MAT	SEE NOTE ②	DR M. Hasegawa	DATE 7/22/'99	CUSTOMER COPY
LINEAR			3/ft ②#811	ENGR M. Kojima	7/22/'99	THIRD ANGLE PROJ
		FINISH	SEE NOTE ③	CHK		UNIT MM
ANGLES			3/ft ③#811	APPD		

TITLE 68P EJECTOR HEADER TYPE I/II/III MECHANISM ASSY

SCALE	SIZE	DWG. NO.	REV	SHEET
2/1	C	92192	N	5 OF

DF-003A REV D

DO NOT SCALE PRINT THIS INFORMATION IS CONFIDENTIAL AND IS DISCLOSED TO YOU ON CONDITION THAT NO FURTHER DISCLOSURE IS MADE BY YOU TO OTHER THAN FCI PERSONNEL WITHOUT WRITTEN AUTHORIZATION FROM FCI JAPAN K.K.

PDM: Rev:N STATUS:Released Printed: Oct 12, 2010

Downloaded from Elcodis.com electronic components distributor