Wet Tantalum Capacitors, Military Established Reliability, MIL-PRF-39006 Qualified Styles CLR65, 79, 81, 90, 91

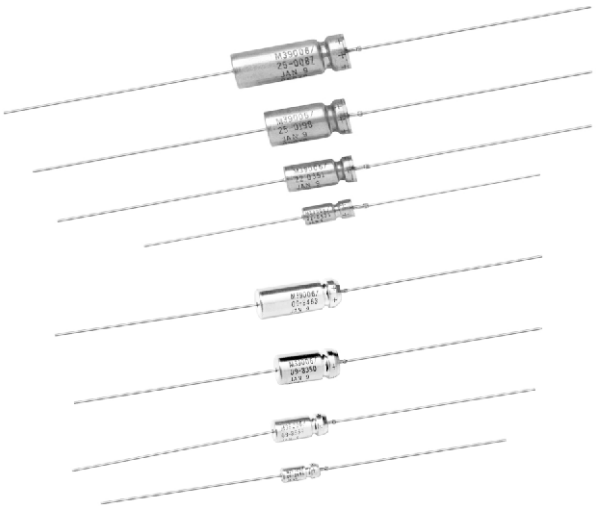

FEATURES

- Hermetically sealed
- Metal cased
- Axial lead
- Tubular

SPECIFICATIONS

Style CLR65, M39006/09

Style CLR69, M39006/21

Style CLR79, M39006/22

Style CLR81, M39006/25

Style CLR90, M39006/30

Style CLR91, M39006/31

Established Reliability Tantalum Capacitors to Military Specification MIL-PRF-39006: In accordance with the Military Specification, MIL-PRF-39006 all capacitors are marked with the Military Part Number (M39006/xx-xxxx) rather than the older Style designation (CLRxxxxxxxx) and should be ordered as such.

For information on the performance characteristics of these capacitors, please refer to the latest issue of the Military Specification. MIL-PRF-39006 establishes 1000 h failure rate levels of 2 %, 1 %, 0.1 %, and 0.01 %. When ordering these parts, care must be exercised that the correct part number expressing the appropriate failure level be specified.

Each order for Military Style capacitors requiring government inspection must state whether inspection is to be at the destination or at the Vishay Sprague plant. Orders requiring source inspection cannot be shipped until this has been accomplished

MILITARY SPECIFICATION MIL-PRF-39006 ORDERING INFORMATION

M39006	22	0660
BASIC DOCUMENT NUMBER	DETAIL SPECIFICATION NUMBER	DASH NUMBER
Indicates the Basic Specification; in this case MIL-PRF-39006	Indicates the Detail Specification of the Basic Military Specification	Taken from Standard/ Extended Ratings Tables

Note
The material in this section has been abstracted from MIL-PRF-39006/09/22/25/30/31.

Downloaded from Elcodis.com electronic components distributor

DIMENSIONS in inches [millimeters]

STYLE CLR65
STYLE CLR69

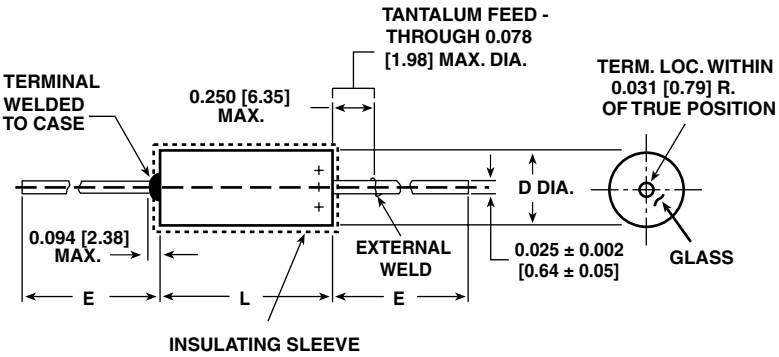

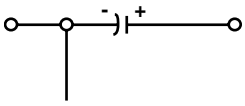

CIRCUIT DIAGRAM

CASE CODE	BARE CASE		WITH INSULATING SLEEVE		E LEAD LENGTH	WEIGHT (oz./g) (Max.)
	D	L	D (Max.)	L (Max.)		
T1	0.188 ± 0.016 [4.78 ± 0.41]	0.453 + 0.031 - 0.016 [11.51 + 0.79 - 0.41]	0.219 [5.56]	0.515 [13.08]	1.500 ± 0.250 [38.10 ± 6.35]	0.07 [2.0]
T2	0.281 ± 0.016 [7.14 ± 0.41]	0.641 + 0.031 - 0.016 [16.28 + 0.79 - 0.41]	0.312 [7.92]	0.704 [17.88]	2.250 ± 0.250 [57.15 ± 6.35]	0.18 [5.1]
T3	0.375 ± 0.016 [9.53 ± 0.41]	0.766 + 0.031 - 0.016 [19.46 + 0.79 - 0.41]	0.406 [10.31]	0.828 [21.03]	2.250 ± 0.250 [57.15 ± 6.35]	0.36 [10.2]
T4	0.375 ± 0.016 [9.53 ± 0.41]	1.062 + 0.031 - 0.016 [26.97 + 0.79 - 0.41]	0.406 [10.31]	1.126 [28.60]	2.250 ± 0.250 [57.15 ± 6.35]	0.49 [13.9]

STYLE CLR79
STYLE CLR81
STYLE CLR90
STYLE CLR91

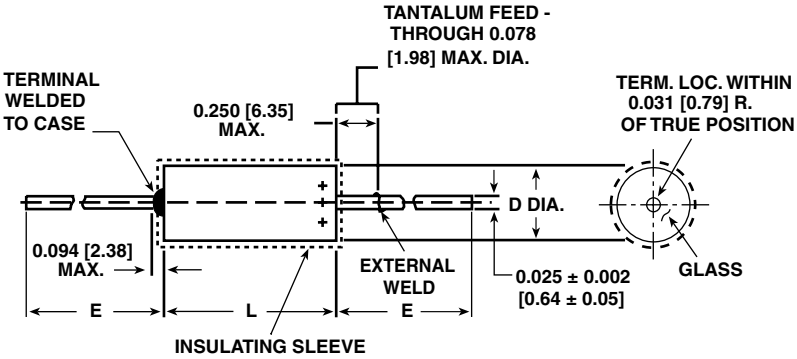

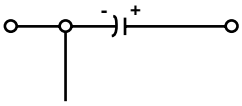

CASE
CIRCUIT DIAGRAM

CASE CODE	BARE CASE		WITH INSULATING SLEEVE		E LEAD LENGTH	WEIGHT (oz./g) (Max.)
	D	L	D (Max.)	L (Max.)		
T1	0.188 ± 0.016 [4.78 ± 0.41]	0.453 + 0.031 - 0.016 [11.51 + 0.79 - 0.41]	0.219 [5.56]	0.515 [13.08]	1.500 ± 0.250 [38.10 ± 6.35]	0.09 [2.6]
T2	0.281 ± 0.016 [7.14 ± 0.41]	0.641 + 0.031 - 0.016 [16.28 + 0.79 - 0.41]	0.312 [7.92]	0.704 [17.88]	2.250 ± 0.250 [57.15 ± 6.35]	0.22 [6.2]
T3	0.375 ± 0.016 [9.53 ± 0.41]	0.766 + 0.031 - 0.016 [19.46 + 0.79 - 0.41]	0.406 [10.31]	0.828 [21.03]	2.250 ± 0.250 [57.15 ± 6.35]	0.41 [11.6]
T4	0.375 ± 0.016 [9.53 ± 0.41]	1.062 + 0.031 - 0.016 [26.97 + 0.79 - 0.41]	0.406 [10.31]	1.126 [28.60]	2.250 ± 0.250 [57.15 ± 6.35]	0.62 [17.7]

Downloaded from Elcodis.com electronic components distributor

STANDARD/EXTENDED RATINGS: CLR65*, M39006/09-XXXX

CAPACITANCE (µF)	CASE CODE	CAP. TOL. (± %)	PART NO. M39006/09- FAILURE RATE LEVEL (%/1000 h)				MAX. DCL (µA) at		MAX. DF at + 25 °C (%)	MAX. IMP. at - 55 °C (Ω)	MAX. CAPACITANCE CHANGE (%) at		
			L 2.0	M 1.0	P 0.1	R 0.01	+ 25 °C	+ 85 °C + 125 °C			- 55 °C	+ 85 °C	+ 125 °C
6 WVDC at + 85 °C . . . 4 WVDC at + 125 °C													
30.0	T1	20	8001	8206	8411	8616	1.0	2.0	9.1	100	- 40	+ 10.5	+ 12
30.0	T1	10	8002	8207	8412	8617	1.0	2.0	9.1	100	- 40	+ 10.5	+ 12
30.0	T1	5	8003	8208	8413	8618	1.0	2.0	9.1	100	- 40	+ 10.5	+ 12
68.0	T1	20	8004	8209	8414	8619	1.0	2.0	20.4	60	- 40	+ 14	+ 16
68.0	T1	10	8005	8210	8415	8620	1.0	2.0	20.4	60	- 40	+ 14	+ 16
68.0	T1	5	8006	8211	8416	8621	1.0	2.0	20.4	60	- 40	+ 14	+ 16
140.0	T2	20	8007	8212	8417	8622	1.0	3.0	21.3	40	- 40	+ 14	+ 16
140.0	T2	10	8008	8213	8418	8623	1.0	3.0	21.3	40	- 40	+ 14	+ 16
140.0	T2	5	8009	8214	8419	8624	1.0	3.0	21.3	40	- 40	+ 14	+ 16
270.0	T2	20	8010	8215	8420	8625	1.0	6.5	81.8	25	- 44	+ 17.5	+ 20
270.0	T2	10	8011	8216	8421	8626	1.0	6.5	81.8	25	- 44	+ 17.5	+ 20
270.0	T2	5	8012	8217	8422	8627	1.0	6.5	81.8	25	- 44	+ 17.5	+ 20
330.0	T3	20	8013	8218	8423	8628	2.0	7.9	49.6	20	- 44	+ 14	+ 16
330.0	T3	10	8014	8219	8424	8629	2.0	7.9	49.6	20	- 44	+ 14	+ 16
330.0	T3	5	8015	8220	8425	8630	2.0	7.9	49.6	20	- 44	+ 14	+ 16
560.0	T3	20	8016	8221	8426	8631	2.0	13.0	128.0	25	- 64	+ 17.5	+ 20
560.0	T3	10	8017	8222	8427	8632	2.0	13.0	128.0	25	- 64	+ 17.5	+ 20
560.0	T3	5	8018	8223	8428	8633	2.0	13.0	128.0	25	- 64	+ 17.5	+ 20
1200.0	T4	20	8019	8224	8429	8634	3.0	14.0	144.4	20	- 80	+ 25	+ 25
1200.0	T4	10	8020	8225	8430	8635	3.0	14.0	144.4	20	- 80	+ 25	+ 25
8 WVDC at + 85 °C . . . 5 WVDC at + 125 °C													
25.0	T1	20	8021	8226	8431	8636	1.0	2.0	7.6	100	- 40	+ 10.5	+ 12
25.0	T1	10	8022	8227	8432	8637	1.0	2.0	7.6	100	- 40	+ 10.5	+ 12
25.0	T1	5	8023	8228	8433	8638	1.0	2.0	7.6	100	- 40	+ 10.5	+ 12
56.0	T1	20	8024	8229	8434	8639	1.0	2.0	17.0	59	- 40	+ 14	+ 16
56.0	T1	10	8025	8230	8435	8640	1.0	2.0	17.0	59	- 40	+ 14	+ 16
56.0	T1	5	8026	8231	8436	8641	1.0	2.0	17.0	59	- 40	+ 14	+ 16
220.0	T2	20	8027	8232	8437	8642	1.0	7.0	66.4	30	- 44	+ 17.5	+ 20
220.0	T2	10	8028	8233	8438	8643	1.0	7.0	66.4	30	- 44	+ 17.5	+ 20
220.0	T2	5	8029	8234	8439	8644	1.0	7.0	66.4	30	- 44	+ 17.5	+ 20
430.0	T3	20	8030	8235	8440	8645	2.0	14.0	91.5	25	- 64	+ 17.5	+ 20
430.0	T3	10	8031	8236	8441	8646	2.0	14.0	91.5	25	- 64	+ 17.5	+ 20
430.0	T3	5	8032	8237	8442	8647	2.0	14.0	91.5	25	- 64	+ 17.5	+ 20
850.0	T4	20	8033	8238	8443	8648	4.0	16.0	65.8	22	- 80	+ 25	+ 25
850.0	T4	10	8034	8239	8444	8649	4.0	16.0	65.8	22	- 80	+ 25	+ 25
10 WVDC at + 85 °C . . . 7 WVDC at + 125 °C													
20.0	T1	20	8035	8240	8445	8650	1.0	2.0	6.1	175	- 32	+ 10.5	+ 12
20.0	T1	10	8036	8241	8446	8651	1.0	2.0	6.1	175	- 32	+ 10.5	+ 12
20.0	T1	5	8037	8242	8447	8652	1.0	2.0	6.1	175	- 32	+ 10.5	+ 12
47.0	T1	20	8038	8243	8448	8653	1.0	2.0	18.1	100	- 36	+ 14	+ 16
47.0	T1	10	8039	8244	8449	8654	1.0	2.0	18.1	100	- 36	+ 14	+ 16
47.0	T1	5	8040	8245	8450	8655	1.0	2.0	18.1	100	- 36	+ 14	+ 16
100.0	T2	20	8041	8246	8451	8656	1.0	4.0	15.2	60	- 36	+ 14	+ 16
100.0	T2	10	8042	8247	8452	8657	1.0	4.0	15.2	60	- 36	+ 14	+ 16
100.0	T2	5	8043	8248	8453	8658	1.0	4.0	15.2	60	- 36	+ 14	+ 16
180.0	T2	20	8044	8249	8454	8659	1.0	7.0	54.4	40	- 36	+ 14	+ 16
180.0	T2	10	8045	8250	8455	8660	1.0	7.0	54.4	40	- 36	+ 14	+ 16
180.0	T2	5	8046	8251	8456	8661	1.0	7.0	54.4	40	- 36	+ 14	+ 16
250.0	T3	20	8047	8252	8457	8662	2.0	10.0	37.8	30	- 40	+ 14	+ 16
250.0	T3	10	8048	8253	8458	8663	2.0	10.0	37.8	30	- 40	+ 14	+ 16
250.0	T3	5	8049	8254	8459	8664	2.0	10.0	37.8	30	- 40	+ 14	+ 16
390.0	T3	20	8050	8255	8460	8665	2.0	16.0	87.6	25	- 64	+ 17.5	+ 20
390.0	T3	10	8051	8256	8461	8666	2.0	16.0	87.6	25	- 64	+ 17.5	+ 20
390.0	T3	5	8052	8257	8462	8667	2.0	16.0	87.6	25	- 64	+ 17.5	+ 20
750.0	T4	20	8053	8258	8463	8668	4.0	16.0	56.5	23	- 80	+ 25	+ 25
750.0	T4	10	8054	8259	8464	8669	4.0	16.0	56.5	23	- 80	+ 25	+ 25

Note

* Style CLR65 is inactive for new military design. For new design use Style CLR79.

Downloaded from Elcodis.com electronic components distributor

STANDARD/EXTENDED RATINGS: CLR65*, M39006/09-XXXX

CAPACITANCE (µF)	CASE CODE	CAP. TOL. (± %)	PART NO. M39006/09- FAILURE RATE LEVEL (%/1000 h)				MAX. DCL (µA) at		MAX. DF at + 25 °C (%)	MAX. IMP. at - 55 °C (Ω)	MAX. CAPACITANCE CHANGE (%) at		
			L 2.0	M 1.0	P 0.1	R 0.01	+ 25 °C	+ 85 °C + 125 °C			- 55 °C	+ 85 °C	+ 125 °C
15 WVDC at + 85 °C . . . 10 WVDC at + 125 °C													
15.0	T1	20	8055	8260	8465	8670	1.0	2.0	5.7	155	- 24	+ 10.5	+ 12
15.0	T1	10	8056	8261	8466	8671	1.0	2.0	5.7	155	- 24	+ 10.5	+ 12
15.0	T1	5	8057	8262	8467	8672	1.0	2.0	5.7	155	- 24	+ 10.5	+ 12
33.0	T1	20	8058	8263	8468	8673	1.0	2.0	12.5	90	- 28	+ 14	+ 16
33.0	T1	10	8059	8264	8469	8674	1.0	2.0	12.5	90	- 28	+ 14	+ 16
33.0	T1	5	8060	8265	8470	8675	1.0	2.0	12.5	90	- 28	+ 14	+ 16
70.0	T2	20	8061	8266	8471	8676	1.0	4.0	13.1	75	- 28	+ 14	+ 16
70.0	T2	10	8062	8267	8472	8677	1.0	4.0	13.1	75	- 28	+ 14	+ 16
70.0	T2	5	8063	8268	8473	8678	1.0	4.0	13.1	75	- 28	+ 14	+ 16
120.0	T2	20	8064	8269	8474	8679	1.0	7.0	36.8	50	- 28	+ 17.5	+ 20
120.0	T2	10	8065	8270	8475	8680	1.0	7.0	36.8	50	- 28	+ 17.5	+ 20
120.0	T2	5	8066	8271	8476	8681	1.0	7.0	36.8	50	- 28	+ 17.5	+ 20
170.0	T3	20	8067	8272	8477	8682	2.0	10.0	25.4	35	- 32	+ 14	+ 16
170.0	T3	10	8068	8273	8478	8683	2.0	10.0	25.4	35	- 32	+ 14	+ 16
170.0	T3	5	8069	8274	8479	8684	2.0	10.0	25.4	35	- 32	+ 14	+ 16
270.0	T3	20	8070	8275	8480	8685	2.0	16.0	60.9	30	- 56	+ 17.5	+ 20
270.0	T3	10	8071	8276	8481	8686	2.0	16.0	60.9	30	- 56	+ 17.5	+ 20
270.0	T3	5	8072	8277	8482	8687	2.0	16.0	60.9	30	- 56	+ 17.5	+ 20
540.0	T4	20	8073	8278	8483	8688	6.0	24.0	49.0	23	- 80	+ 25	+ 25
540.0	T4	10	8074	8279	8484	8689	6.0	24.0	49.0	23	- 80	+ 25	+ 25
25 WVDC at + 85 °C . . . 15 WVDC at + 125 °C													
10.0	T1	20	8075	8280	8485	8690	1.0	2.0	4.6	220	- 16	+ 8	+ 9
10.0	T1	10	8076	8281	8486	8691	1.0	2.0	4.6	220	- 16	+ 8	+ 9
10.0	T1	5	8077	8282	8487	8692	1.0	2.0	4.6	220	- 16	+ 8	+ 9
22.0	T1	20	8078	8283	8488	8693	1.0	2.0	8.3	140	- 20	+ 10.5	+ 12
22.0	T1	10	8079	8284	8489	8694	1.0	2.0	8.3	140	- 20	+ 10.5	+ 12
22.0	T1	5	8080	8285	8490	8695	1.0	2.0	8.3	140	- 20	+ 10.5	+ 12
100.0	T2	20	8081	8286	8491	8696	1.0	10.0	31.4	50	- 28	+ 13	+ 15
100.0	T2	10	8082	8287	8492	8697	1.0	10.0	31.4	50	- 28	+ 13	+ 15
100.0	T2	5	8083	8288	8493	8698	1.0	10.0	31.4	50	- 28	+ 13	+ 15
180.0	T3	20	8084	8289	8494	8699	2.0	18.0	54.3	32	- 48	+ 13	+ 15
180.0	T3	10	8085	8290	8495	8700	2.0	18.0	54.3	32	- 48	+ 13	+ 15
180.0	T3	5	8086	8291	8496	8701	2.0	18.0	54.3	32	- 48	+ 13	+ 15
350.0	T4	20	8087	8292	8497	8702	7.0	28.0	35.0	24	- 70	+ 25	+ 25
350.0	T4	10	8088	8293	8498	8703	7.0	28.0	35.0	24	- 70	+ 25	+ 25
30 WVDC at + 85 °C . . . 20 WVDC at + 125 °C													
8.0	T1	20	8089	8294	8499	8704	1.0	2.0	4.5	275	- 16	+ 8	+ 12
8.0	T1	10	8090	8295	8500	8705	1.0	2.0	4.5	275	- 16	+ 8	+ 12
8.0	T1	5	8091	8296	8501	8706	1.0	2.0	4.5	275	- 16	+ 8	+ 12
15.0	T1	20	8092	8297	8502	8707	1.0	2.0	9.1	175	- 20	+ 10.5	+ 12
15.0	T1	10	8093	8298	8503	8708	1.0	2.0	9.1	175	- 20	+ 10.5	+ 12
15.0	T1	5	8094	8299	8504	8709	1.0	2.0	9.1	175	- 20	+ 10.5	+ 12
40.0	T2	20	8095	8300	8505	8710	1.0	5.0	12.2	65	- 24	+ 10.5	+ 12
40.0	T2	10	8096	8301	8506	8711	1.0	5.0	12.2	65	- 24	+ 10.5	+ 12
40.0	T2	5	8097	8302	8507	8712	1.0	5.0	12.2	65	- 24	+ 10.5	+ 12
68.0	T2	20	8098	8303	8508	8713	1.0	8.0	31.0	60	- 24	+ 13	+ 15
68.0	T2	10	8099	8304	8509	8714	1.0	8.0	31.0	60	- 24	+ 13	+ 15
68.0	T2	5	8100	8305	8510	8715	1.0	8.0	31.0	60	- 24	+ 13	+ 15
100.0	T3	20	8101	8306	8511	8716	2.0	12.0	19.0	40	- 28	+ 10.5	+ 12
100.0	T3	10	8102	8307	8512	8717	2.0	12.0	19.0	40	- 28	+ 10.5	+ 12
100.0	T3	5	8103	8308	8513	8718	2.0	12.0	19.0	40	- 28	+ 10.5	+ 12
150.0	T3	20	8104	8309	8514	8719	2.0	18.0	46.0	35	- 48	+ 13	+ 15
150.0	T3	10	8105	8310	8515	8720	2.0	18.0	46.0	35	- 48	+ 13	+ 15
150.0	T3	5	8106	8311	8516	8721	2.0	18.0	46.0	35	- 48	+ 13	+ 15
300.0	T4	20	8107	8312	8517	8722	8.0	32.0	35.0	25	- 60	+ 25	+ 25
300.0	T4	10	8108	8313	8518	8723	8.0	32.0	35.0	25	- 60	+ 25	+ 25

Note

* Style CLR65 is inactive for new military design. For new design use Style CLR79.

Downloaded from Elcodis.com electronic components distributor

STANDARD/EXTENDED RATINGS: CLR65*, M39006/09-XXXX

CAPACITANCE (µF)	CASE CODE	CAP. TOL. (± %)	PART NO. M39006/09- FAILURE RATE LEVEL (%/1000 h)				MAX. DCL (µA) at		MAX. DF at + 25 °C (%)	MAX. IMP. at - 55 °C (Ω)	Max. CAPACITANCE CHANGE (%) at		
			L 2.0	M 1.0	P 0.1	R 0.01	+ 25 °C	+ 85 °C + 125 °C			- 55 °C	+ 85 °C	+ 125 °C
50 WVDC at + 85 °C . . . 30 WVDC at + 125 °C													
5.0	T1	20	8109	8314	8519	8724	1.0	2.0	3.4	400	- 16	+ 5	+ 6
5.0	T1	10	8110	8315	8520	8725	1.0	2.0	3.4	400	- 16	+ 5	+ 6
5.0	T1	5	8111	8316	8521	8726	1.0	2.0	3.4	400	- 16	+ 5	+ 6
10.0	T1	20	8112	8317	8522	8727	1.0	2.0	6.0	250	- 24	+ 8	+ 9
10.0	T1	10	8113	8318	8523	8728	1.0	2.0	6.0	250	- 24	+ 8	+ 9
10.0	T1	5	8114	8319	8524	8729	1.0	2.0	6.0	250	- 24	+ 8	+ 9
25.0	T2	20	8115	8320	8525	8730	1.0	5.0	11.2	95	- 20	+ 10.5	+ 12
25.0	T2	10	8116	8321	8526	8731	1.0	5.0	11.2	95	- 20	+ 10.5	+ 12
25.0	T2	5	8117	8322	8527	8732	1.0	5.0	11.2	95	- 20	+ 10.5	+ 12
47.0	T2	20	8118	8323	8528	8733	1.0	9.0	21.4	70	- 28	+ 13	+ 15
47.0	T2	10	8119	8324	8529	8734	1.0	9.0	21.4	70	- 28	+ 13	+ 15
47.0	T2	5	8120	8325	8530	8735	1.0	9.0	21.4	70	- 28	+ 13	+ 15
60.0	T3	20	8121	8326	8531	8736	2.0	12.0	13.6	45	- 16	+ 10.5	+ 12
60.0	T3	10	8122	8327	8532	8737	2.0	12.0	13.6	45	- 16	+ 10.5	+ 12
60.0	T3	5	8123	8328	8533	8738	2.0	12.0	13.6	45	- 16	+ 10.5	+ 12
82.0	T3	20	8124	8329	8534	8739	2.0	16.0	24.9	45	- 32	+ 13	+ 15
82.0	T3	10	8125	8330	8535	8740	2.0	16.0	24.9	45	- 32	+ 13	+ 15
82.0	T3	5	8126	8331	8536	8741	2.0	16.0	24.9	45	- 32	+ 13	+ 15
160.0	T4	20	8127	8332	8537	8742	8.0	32.0	25.7	27	- 50	+ 25	+ 25
160.0	T4	10	8128	8333	8538	8743	8.0	32.0	25.7	27	- 50	+ 25	+ 25
60 WVDC at + 85 °C . . . 40 WVDC at + 125 °C													
4.0	T1	20	8129	8334	8539	8744	1.0	2.0	3.0	550	- 16	+ 5	+ 6
4.0	T1	10	8130	8335	8540	8745	1.0	2.0	3.0	550	- 16	+ 5	+ 6
4.0	T1	5	8131	8336	8541	8746	1.0	2.0	3.0	550	- 16	+ 5	+ 6
8.2	T1	20	8132	8337	8542	8747	1.0	2.0	5.0	275	- 24	+ 8	+ 9
8.2	T1	10	8133	8338	8543	8748	1.0	2.0	5.0	275	- 24	+ 8	+ 9
8.2	T1	5	8134	8339	8544	8749	1.0	2.0	5.0	275	- 24	+ 8	+ 9
20.0	T2	20	8135	8340	8545	8750	1.0	5.0	7.6	105	- 16	+ 10.5	+ 12
20.0	T2	10	8136	8341	8546	8751	1.0	5.0	7.6	105	- 16	+ 10.5	+ 12
20.0	T2	5	8137	8342	8547	8752	1.0	5.0	7.6	105	- 16	+ 10.5	+ 12
39.0	T2	20	8138	8343	8548	8753	1.0	9.0	20.7	90	- 28	+ 10.5	+ 12
39.0	T2	10	8139	8344	8549	8754	1.0	9.0	20.7	90	- 28	+ 10.5	+ 12
39.0	T2	5	8140	8345	8550	8755	1.0	9.0	20.7	90	- 28	+ 10.5	+ 12
50.0	T3	20	8141	8346	8551	8756	2.0	12.0	15.3	50	- 16	+ 10.5	+ 12
50.0	T3	10	8142	8347	8552	8757	2.0	12.0	15.3	50	- 16	+ 10.5	+ 12
50.0	T3	5	8143	8348	8553	8758	2.0	12.0	15.3	50	- 16	+ 10.5	+ 12
68.0	T3	20	8144	8349	8554	8759	2.0	16.0	30.7	50	- 32	+ 10.5	+ 12
68.0	T3	10	8145	8350	8555	8760	2.0	16.0	30.7	50	- 32	+ 10.5	+ 12
68.0	T3	5	8146	8351	8556	8761	2.0	16.0	30.7	50	- 32	+ 10.5	+ 12
140.0	T4	20	8147	8352	8557	8762	8.0	32.0	25.7	28	- 40	+ 20	+ 20
140.0	T4	10	8148	8353	8558	8763	8.0	32.0	25.7	28	- 40	+ 20	+ 20
75 WVDC at + 85 °C . . . 50 WVDC at + 125 °C													
3.5	T1	20	8149	8354	8559	8764	1.0	2.0	2.5	650	- 16	+ 5	+ 6
3.5	T1	10	8150	8355	8560	8765	1.0	2.0	2.5	650	- 16	+ 5	+ 6
3.5	T1	5	8151	8356	8561	8766	1.0	2.0	2.5	650	- 16	+ 5	+ 6
6.8	T1	20	8152	8357	8562	8767	1.0	2.0	4.1	300	- 20	+ 8	+ 9
6.8	T1	10	8153	8358	8563	8768	1.0	2.0	4.1	300	- 20	+ 8	+ 9
6.8	T1	5	8154	8359	8564	8769	1.0	2.0	4.1	300	- 20	+ 8	+ 9
15.0	T2	20	8155	8360	8565	8770	1.0	5.0	7.5	150	- 16	+ 8	+ 9
15.0	T2	10	8156	8361	8566	8771	1.0	5.0	7.5	150	- 16	+ 8	+ 9
15.0	T2	5	8157	8362	8567	8772	1.0	5.0	7.4	150	- 16	+ 8	+ 9
33.0	T2	20	8158	8363	8568	8773	1.0	10.0	17.5	90	- 24	+ 10.5	+ 15
33.0	T2	10	8159	8364	8569	8774	1.0	10.0	17.5	90	- 24	+ 10.5	+ 15
33.0	T2	5	8160	8365	8570	8775	1.0	10.0	17.5	90	- 24	+ 10.5	+ 15
40.0	T3	20	8161	8366	8571	8776	2.0	12.0	15.2	60	- 16	+ 10.5	+ 12
40.0	T3	10	8162	8367	8572	8777	2.0	12.0	15.2	60	- 16	+ 10.5	+ 12
40.0	T3	5	8163	8368	8573	8778	2.0	12.0	15.2	60	- 16	+ 10.5	+ 12
56.0	T3	20	8164	8369	8574	8779	2.0	17.0	26.0	60	- 28	+ 10.5	+ 15
56.0	T3	10	8165	8370	8575	8780	2.0	17.0	26.0	60	- 28	+ 10.5	+ 15
56.0	T3	5	8166	8371	8576	8781	2.0	17.0	26.0	60	- 28	+ 10.5	+ 15
110.0	T4	20	8167	8372	8577	8782	9.0	36.0	25.7	29	- 35	+ 20	+ 20
110.0	T4	10	8168	8373	8578	8783	9.0	36.0	25.7	29	- 35	+ 20	+ 20

Note

* Style CLR65 is inactive for new military design. For new design use Style CLR79.

Downloaded from Elcodis.com electronic components distributor

STANDARD/EXTENDED RATINGS: CLR65*, M39006/09-XXXX

CAPACITANCE (µF)	CASE CODE	CAP. TOL. (± %)	PART NO. M39006/09- FAILURE RATE LEVEL (%/1000 h)				MAX. DCL (µA) at		MAX. DF at + 25 °C (%)	MAX. IMP. at - 55 °C (Ω)	MAX.. CAPACITANCE CHANGE (%) at		
			L 2.0	M 1.0	P 0.1	R 0.01	+ 25 °C	+ 85 °C + 125 °C			- 55 °C	+ 85 °C	+ 125 °C
100 WVDC at + 85 °C . . . 65 WVDC at + 125 °C													
2.5	T1	20	8169	8374	8579	8784	1.0	2.0	5.0	950	- 16	+ 7	+ 8
2.5	T1	10	8170	8375	8580	8785	1.0	2.0	5.0	950	- 16	+ 7	+ 8
2.5	T1	5	8171	8376	8581	8786	1.0	2.0	5.0	950	- 16	+ 7	+ 8
4.7	T1	20	8172	8377	8582	8787	1.0	2.0	3.6	500	- 16	+ 7	+ 8
4.7	T1	10	8173	8378	8583	8788	1.0	2.0	3.6	500	- 16	+ 7	+ 8
4.7	T1	5	8174	8379	8584	8789	1.0	2.0	3.6	500	- 16	+ 7	+ 8
11.0	T2	20	8175	8380	8585	8790	1.0	4.0	5.0	200	- 16	+ 7	+ 8
11.0	T2	10	8176	8381	8586	8791	1.0	4.0	5.0	200	- 16	+ 7	+ 8
11.0	T2	5	8177	8382	8587	8792	1.0	4.0	5.0	200	- 16	+ 7	+ 8
22.0	T2	20	8178	8383	8588	8793	1.0	9.0	11.8	100	- 16	+ 7	+ 8
22.0	T2	10	8179	8384	8589	8794	1.0	9.0	11.8	100	- 16	+ 7	+ 8
22.0	T2	5	8180	8385	8590	8795	1.0	9.0	11.8	100	- 16	+ 7	+ 8
30.0	T3	20	8181	8386	8591	8796	2.0	12.0	9.1	80	- 16	+ 7	+ 8
30.0	T3	10	8182	8387	8592	8797	2.0	12.0	9.1	80	- 16	+ 7	+ 8
30.0	T3	5	8183	8388	8593	8798	2.0	12.0	9.1	80	- 16	+ 7	+ 8
43.0	T3	20	8184	8389	8594	8799	2.0	17.0	19.7	70	- 20	+ 7	+ 8
43.0	T3	10	8185	8390	8595	8800	2.0	17.0	19.7	70	- 20	+ 7	+ 8
43.0	T3	5	8186	8391	8596	8801	2.0	17.0	19.7	70	- 20	+ 7	+ 8
86.0	T4	20	8187	8392	8597	8802	9.0	36.0	20.7	30	- 25	+ 15	+ 15
86.0	T4	10	8188	8393	8598	8803	9.0	36.0	20.7	30	- 25	+ 15	+ 15
125 WVDC at + 85 °C . . . 85 WVDC at + 125 °C													
1.7	T1	20	8189	8394	8599	8804	1.0	2.0	7.0	1250	- 16	+ 7	+ 8
1.7	T1	10	8190	8395	8600	8805	1.0	2.0	7.0	1250	- 16	+ 7	+ 8
1.7	T1	5	8191	8396	8601	8806	1.0	2.0	7.0	1250	- 16	+ 7	+ 8
3.6	T1	20	8192	8397	8602	8807	1.0	2.0	4.1	600	- 16	+ 7	+ 8
3.6	T1	10	8193	8398	8603	8808	1.0	2.0	4.1	600	- 16	+ 7	+ 8
3.6	T1	5	8194	8399	8604	8809	1.0	2.0	4.1	600	- 16	+ 7	+ 8
9.0	T2	20	8195	8400	8605	8810	1.0	5.0	10.2	240	- 16	+ 7	+ 8
9.0	T2	10	8196	8401	8606	8811	1.0	5.0	10.2	240	- 16	+ 7	+ 8
9.0	T2	5	8197	8402	8607	8812	1.0	5.0	10.2	240	- 16	+ 7	+ 8
14.0	T2	20	8198	8403	8608	8813	1.0	7.0	12.7	167	- 16	+ 7	+ 8
14.0	T2	10	8199	8404	8609	8814	1.0	7.0	12.7	167	- 16	+ 7	+ 8
14.0	T2	5	8200	8405	8610	8815	1.0	7.0	12.7	167	- 16	+ 7	+ 8
18.0	T3	20	8201	8406	8611	8816	2.0	9.0	15.0	129	- 16	+ 7	+ 8
18.0	T3	10	8202	8407	8612	8817	2.0	9.0	15.0	129	- 16	+ 7	+ 8
18.0	T3	5	8203	8408	8613	8818	2.0	9.0	15.0	129	- 16	+ 7	+ 8
25.0	T3	20	8204	8409	8614	8819	2.0	13.0	19.0	93	- 16	+ 7	+ 8
25.0	T3	10	8205	8410	8615	8820	2.0	13.0	19.0	93	- 16	+ 7	+ 8
25.0	T3	5	9026	9029	9032	9035	2.0	13.0	19.0	93	- 16	+ 7	+ 8
56.0	T4	20	9027	9030	9033	9036	10.0	40.0	17.5	32	- 25	+ 15	+ 15
56.0	T4	10	9028	9031	9034	9037	10.0	40.0	17.5	32	- 25	+ 15	+ 15

Note
* Style CLR65 is inactive for new military design. For new design use Style CLR79.

VOLTAGE DERATING WITH TEMPERATURE

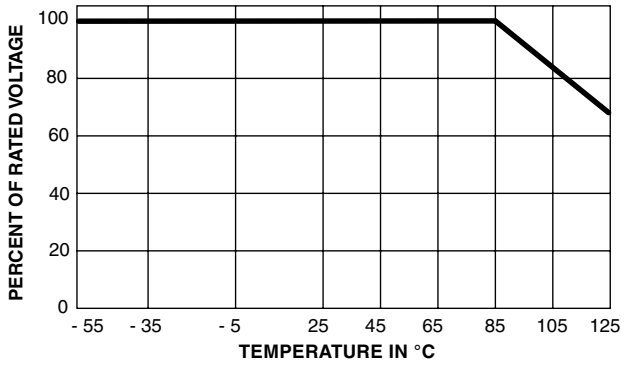

Downloaded from Elcodis.com electronic components distributor

STANDARD/EXTENDED RATINGS: CLR69*, M39006/21-XXXX

CAPACITANCE (µF)	CASE CODE	CAP. TOL. (± %)	PART NO. M39006/21- FAILURE RATE LEVEL (%/1000 h)				MAX. DCL (µA) at		MAX. DF at + 25 °C (%)	MAX. IMP. at - 55 °C (Ω)	MAX. CAPACITANCE CHANGE (%) at		
			L 2.0	M 1.0	P 0.1	R 0.01	+ 25 °C	+ 85 °C + 125 °C			- 55 °C	+ 85 °C	+ 125 °C
6 WVDC at + 85 °C . . . 4 WVDC at + 125 °C													
220.0	T1	20	0001	0089	0177	0265	2.0	9.0	50	36	- 64	+ 13	+ 16
220.0	T1	10	0002	0090	0178	0266	2.0	9.0	50	36	- 64	+ 13	+ 16
820.0	T2	20	0003	0091	0179	0267	3.0	14.0	155	18	- 88	+ 16	+ 20
820.0	T2	10	0004	0092	0180	0268	3.0	14.0	155	18	- 88	+ 16	+ 20
1500.0	T3	20	0005	0093	0181	0269	5.0	20.0	172	18	- 90	+ 20	+ 25
1500.0	T3	10	0006	0094	0182	0270	5.0	20.0	172	18	- 90	+ 20	+ 25
2200.0	T4	20	0007	0095	0183	0271	6.0	24.0	170	13	- 90	+ 25	+ 30
2200.0	T4	10	0008	0096	0184	0272	6.0	24.0	170	13	- 90	+ 25	+ 30
8 WVDC at + 85 °C . . . 5 WVDC at + 125 °C													
180.0	T1	20	0009	0097	0185	0273	2.0	9.0	41	45	- 60	+ 13	+ 16
180.0	T1	10	0010	0098	0186	0274	2.0	9.0	41	45	- 60	+ 13	+ 16
680.0	T2	20	0011	0099	0187	0275	3.0	14.0	130	22	- 83	+ 16	+ 20
680.0	T2	10	0012	0100	0188	0276	3.0	14.0	130	22	- 83	+ 16	+ 20
1500.0	T3	20	0013	0101	0189	0277	5.0	20.0	170	18	- 90	+ 20	+ 25
1500.0	T3	10	0014	0102	0190	0278	5.0	20.0	170	18	- 90	+ 20	+ 25
1800.0	T4	20	0015	0103	0191	0279	7.0	25.0	138	14	- 90	+ 25	+ 30
1800.0	T4	10	0016	0104	0192	0280	7.0	25.0	138	14	- 90	+ 25	+ 30
10 WVDC at + 85 °C . . . 7 WVDC at + 125 °C													
150.0	T1	20	0017	0105	0193	0281	2.0	9.0	34	54	- 55	+ 13	+ 16
150.0	T1	10	0018	0106	0194	0282	2.0	9.0	34	54	- 55	+ 13	+ 16
560.0	T2	20	0019	0107	0195	0283	3.0	16.0	106	27	- 77	+ 16	+ 20
560.0	T2	10	0020	0108	0196	0284	3.0	16.0	106	27	- 77	+ 16	+ 20
1200.0	T3	20	0021	0109	0197	0285	5.0	20.0	137	18	- 88	+ 20	+ 25
1200.0	T3	10	0022	0110	0198	0286	5.0	20.0	137	18	- 88	+ 20	+ 25
1500.0	T4	20	0023	0111	0199	0287	7.0	25.0	114	15	- 88	+ 25	+ 30
1500.0	T4	10	0024	0112	0200	0288	7.0	25.0	114	15	- 88	+ 25	+ 30
15 WVDC at + 85 °C . . . 10 WVDC at + 125 °C													
100.0	T1	20	0025	0113	0201	0289	2.0	9.0	30	72	- 44	+ 13	+ 16
100.0	T1	10	0026	0114	0202	0290	2.0	9.0	30	72	- 44	+ 13	+ 16
390.0	T2	20	0027	0115	0203	0291	3.0	16.0	74	31	- 66	+ 16	+ 20
390.0	T2	10	0028	0116	0204	0292	3.0	16.0	74	31	- 66	+ 16	+ 20
820.0	T3	20	0029	0117	0205	0293	6.0	24.0	111	22	- 77	+ 20	+ 25
820.0	T3	10	0030	0118	0206	0294	6.0	24.0	111	22	- 77	+ 20	+ 25
1000.0	T4	20	0031	0119	0207	0295	8.0	32.0	92	17	- 77	+ 25	+ 30
1000.0	T4	10	0032	0120	0208	0296	8.0	32.0	92	17	- 77	+ 25	+ 30
25 WVDC at + 85 °C . . . 15 WVDC at + 125 °C													
68.0	T1	20	0033	0121	0209	0297	2.0	9.0	22	90	- 40	+ 12	+ 15
68.0	T1	10	0034	0122	0210	0298	2.0	9.0	22	90	- 40	+ 12	+ 15
270.0	T2	20	0035	0123	0211	0299	3.0	16.0	55	33	- 62	+ 13	+ 16
270.0	T2	10	0036	0124	0212	0300	3.0	16.0	55	33	- 62	+ 13	+ 16
560.0	T3	20	0037	0125	0213	0301	7.0	28.0	76	24	- 72	+ 20	+ 25
560.0	T3	10	0038	0126	0214	0302	7.0	28.0	76	24	- 72	+ 20	+ 25
680.0	T4	20	0039	0127	0215	0303	8.0	32.0	63	19	- 72	+ 25	+ 30
680.0	T4	10	0040	0128	0216	0304	8.0	32.0	63	19	- 72	+ 25	+ 30
30 WVDC at + 85 °C . . . 20 WVDC at + 125 °C													
56.0	T1	20	0041	0129	0217	0305	2.0	9.0	22	100	- 38	+ 12	+ 15
56.0	T1	10	0042	0130	0218	0306	2.0	9.0	22	100	- 38	+ 12	+ 15
220.0	T2	20	0043	0131	0219	0307	3.0	16.0	42	36	- 60	+ 13	+ 16
220.0	T2	10	0044	0132	0220	0308	3.0	16.0	42	36	- 60	+ 13	+ 16
470.0	T3	20	0045	0133	0221	0309	8.0	32.0	64	25	- 65	+ 20	+ 25
470.0	T3	10	0046	0134	0222	0310	8.0	32.0	64	25	- 65	+ 20	+ 25
560.0	T4	20	0047	0135	0223	0311	9.0	36.0	55	20	- 65	+ 25	+ 30
560.0	T4	10	0048	0136	0224	0312	9.0	36.0	55	20	- 65	+ 25	+ 30

Note

* Style CLR65 is inactive for new military design. For new design use Style CLR81.

Downloaded from Elcodis.com electronic components distributor

STANDARD/EXTENDED RATINGS: CLR69*, M39006/21-XXXX

CAPACITANCE (µF)	CASE CODE	CAP. TOL. (± %)	PART NO. M39006/21- FAILURE RATE LEVEL (%/1000 h)				MAX. DCL (µA) at		MAX. DF at + 25 °C (%)	MAX. IMP. at - 55 °C (Ω)	MAX. CAPACITANCE CHANGE (%) at		
			L 2.0	M 1.0	P 0.1	R 0.01	+ 25 °C	+ 85 °C + 125 °C			- 55 °C	+ 85 °C	+ 125 °C
50 WVDC at + 85 °C . . . 30 WVDC at + 125 °C													
33.0	T1	20	0049	0137	0225	0313	2.0	9.0	12.3	135	- 29	+ 10	+ 12
33.0	T1	10	0050	0138	0226	0314	2.0	9.0	12.3	135	- 29	+ 10	+ 12
120.0	T2	20	0051	0139	0227	0315	4.0	24.0	22.5	49	- 42	+ 12	+ 15
120.0	T2	10	0052	0140	0228	0316	4.0	24.0	22.5	49	- 42	+ 12	+ 15
270.0	T3	20	0053	0141	0229	0317	8.0	32.0	37	29	- 46	+ 20	+ 25
270.0	T3	10	0054	0142	0230	0318	8.0	32.0	37	29	- 46	+ 20	+ 25
330.0	T4	20	0055	0143	0231	0319	9.0	36.0	38	22	- 46	+ 25	+ 30
330.0	T4	10	0056	0144	0232	0320	9.0	36.0	38	22	- 46	+ 25	+ 30
60 WVDC at + 85 °C . . . 40 WVDC at + 125 °C													
27.0	T1	20	0057	0145	0233	0321	3.0	12.0	10.2	144	- 24	+ 10	+ 12
27.0	T1	10	0058	0146	0234	0322	3.0	12.0	10.2	144	- 24	+ 10	+ 12
100.0	T2	20	0059	0147	0235	0323	4.0	20.0	19	54	- 36	+ 12	+ 15
100.0	T2	10	0060	0148	0236	0324	4.0	20.0	19	54	- 36	+ 12	+ 15
220.0	T3	20	0061	0149	0237	0325	8.0	32.0	30	29	- 40	+ 16	+ 20
220.0	T3	10	0062	0150	0238	0326	8.0	32.0	30	29	- 40	+ 16	+ 20
270.0	T4	20	0063	0151	0239	0327	9.0	36.0	27	23	- 45	+ 20	+ 25
270.0	T4	10	0064	0152	0240	0328	9.0	36.0	27	23	- 45	+ 20	+ 25
75 WVDC at + 85 °C . . . 50 WVDC at + 125 °C													
22.0	T1	20	0065	0153	0241	0329	3.0	12.0	8.5	157	- 19	+ 10	+ 12
22.0	T1	10	0066	0154	0242	0330	3.0	12.0	8.5	157	- 19	+ 10	+ 12
82.0	T2	20	0067	0155	0243	0331	4.0	24.0	15.2	63	- 30	+ 12	+ 15
82.0	T2	10	0068	0156	0244	0332	4.0	24.0	15.2	63	- 30	+ 12	+ 15
180.0	T3	20	0069	0157	0245	0333	9.0	36.0	24.4	30	- 35	+ 16	+ 20
180.0	T3	10	0070	0158	0246	0334	9.0	36.0	24.4	30	- 35	+ 16	+ 20
220.0	T4	20	0071	0159	0247	0335	10.0	40.0	37.0	24	- 40	+ 20	+ 25
220.0	T4	10	0072	0160	0248	0336	10.0	40.0	37.0	24	- 40	+ 20	+ 25
100 WVDC at + 85 °C . . . 65 WVDC at + 125 °C													
10.0	T1	20	0073	0161	0249	0337	3.0	12.0	4.5	200	- 17	+ 10	+ 12
10.0	T1	10	0074	0162	0250	0338	3.0	12.0	4.5	200	- 17	+ 10	+ 12
39.0	T2	20	0075	0163	0251	0339	5.0	24.0	10.4	80	- 20	+ 12	+ 15
39.0	T2	10	0076	0164	0252	0340	5.0	24.0	10.4	80	- 20	+ 12	+ 15
68.0	T3	20	0077	0165	0253	0341	10.0	40.0	11.3	40	- 30	+ 14	+ 16
68.0	T3	10	0078	0166	0254	0342	10.0	40.0	11.3	40	- 30	+ 14	+ 16
120.0	T4	20	0079	0167	0255	0343	12.0	48.0	25	30	- 35	+ 15	+ 17
120.0	T4	10	0080	0168	0256	0344	12.0	48.0	25	30	- 35	+ 15	+ 17
125 WVDC at + 85 °C . . . 85 WVDC at + 125 °C													
6.8	T1	20	0081	0169	0257	0345	3.0	12.0	6.0	300	- 14	+ 10	+ 12
6.8	T1	10	0082	0170	0258	0346	3.0	12.0	6.0	300	- 14	+ 10	+ 12
27.0	T2	20	0083	0171	0259	0347	5.0	24.0	7.2	90	- 18	+ 12	+ 15
27.0	T2	10	0084	0172	0260	0348	5.0	24.0	7.2	90	- 18	+ 12	+ 15
47.0	T3	20	0085	0173	0261	0349	10.0	40.0	7.9	50	- 26	+ 14	+ 16
47.0	T3	10	0086	0174	0262	0350	10.0	40.0	7.9	50	- 26	+ 14	+ 16
82.0	T4	20	0087	0175	0263	0351	12.0	48.0	17.4	32	- 30	+ 15	+ 17
82.0	T4	10	0088	0176	0264	0352	12.0	48.0	17.4	32	- 30	+ 15	+ 17

Note

* Style CLR65 is inactive for new military design. For new design use Style CLR81.

Downloaded from Elcodis.com electronic components distributor

STANDARD/EXTENDED RATINGS: CLR79, M39006/22-XXXX

CAPACITANCE (µF)	CASE CODE	CAP. TOL. (± %)	PART NO. M39006/22-* FAILURE RATE LEVEL (%/1000 h)			MAX. DCL (µA) at		MAX. DF at + 25 °C (%)	MAX. IMP. at - 55 °C (Ω)	MAX. CAPACITANCE CHANGE (%) at			MAX.** RIPPLE CURRENT at + 85 °C 40 kHz (mA)
			M 1.0	P 0.1	R 0.01	+ 25 °C	+ 85 °C + 125 °C			- 55 °C	+ 85 °C	+ 125 °C	
6 WVDC at + 85 °C . . . 4 WVDC at + 125 °C													
30.0	T1	20	0001	0221	0441	1.0	2.0	9	100	- 40	+ 10.5	+ 12	820
30.0	T1	10	0002	0222	0442	1.0	2.0	9	100	- 40	+ 10.5	+ 12	820
30.0	T1	5	0003	0223	0443	1.0	2.0	9	100	- 40	+ 10.5	+ 12	820
68.0	T1	20	0004	0224	0444	1.0	2.0	15	60	- 40	+ 14	+ 16	960
68.0	T1	10	0005	0225	0445	1.0	2.0	15	60	- 40	+ 14	+ 16	960
68.0	T1	5	0006	0226	0446	1.0	2.0	15	60	- 40	+ 14	+ 16	960
140.0	T2	20	0007	0227	0447	1.0	3.0	21	40	- 40	+ 14	+ 16	1200
140.0	T2	10	0008	0228	0448	1.0	3.0	21	40	- 40	+ 14	+ 16	1200
140.0	T2	5	0009	0229	0449	1.0	3.0	21	40	- 40	+ 14	+ 16	1200
270.0	T2	20	0010	0230	0450	1.0	6.5	45	25	- 44	+ 17.5	+ 20	1375
270.0	T2	10	0011	0231	0451	1.0	6.5	45	25	- 44	+ 17.5	+ 20	1375
270.0	T2	5	0012	0232	0452	1.0	6.5	45	25	- 44	+ 17.5	+ 20	1375
330.0	T3	20	0013	0233	0453	2.0	7.9	36	20	- 44	+ 14	+ 16	1800
330.0	T3	10	0014	0234	0454	2.0	7.9	36	20	- 44	+ 14	+ 16	1800
330.0	T3	5	0015	0235	0455	2.0	7.9	36	20	- 44	+ 14	+ 16	1800
560.0	T3	20	0016	0236	0456	2.0	13.0	55	25	- 64	+ 17.5	+ 20	1900
560.0	T3	10	0017	0237	0457	2.0	13.0	55	25	- 64	+ 17.5	+ 20	1900
560.0	T3	5	0018	0238	0458	2.0	13.0	55	25	- 64	+ 17.5	+ 20	1900
1200.0	T4	20	0019	0239	0459	3.0	14.0	90	20	- 80	+ 25	+ 25	2265
1200.0	T4	10	0020	0240	0460	3.0	14.0	90	20	- 80	+ 25	+ 25	2265
8 WVDC at + 85 °C . . . 5 WVDC at + 125 °C													
25.0	T1	20	0021	0241	0461	1.0	2.0	7.5	100	- 40	+ 10.5	+ 12	820
25.0	T1	10	0022	0242	0462	1.0	2.0	7.5	100	- 40	+ 10.5	+ 12	820
25.0	T1	5	0023	0243	0463	1.0	2.0	7.5	100	- 40	+ 10.5	+ 12	820
56.0	T1	20	0024	0244	0464	1.0	2.0	14	59	- 40	+ 14	+ 16	900
56.0	T1	10	0025	0245	0465	1.0	2.0	14	59	- 40	+ 14	+ 16	900
56.0	T1	5	0026	0246	0466	1.0	2.0	14	59	- 40	+ 14	+ 16	900
120.0	T2	20	0027	0247	0467	1.0	2.0	20	50	- 44	+ 17.5	+ 20	1220
120.0	T2	10	0028	0248	0468	1.0	2.0	20	50	- 44	+ 17.5	+ 20	1220
120.0	T2	5	0029	0249	0469	1.0	2.0	20	50	- 44	+ 17.5	+ 20	1220
220.0	T2	20	0030	0250	0470	1.0	7.0	37	30	- 44	+ 17.5	+ 20	1370
220.0	T2	10	0031	0251	0471	1.0	7.0	37	30	- 44	+ 17.5	+ 20	1370
220.0	T2	5	0032	0252	0472	1.0	7.0	37	30	- 44	+ 17.5	+ 20	1370
290.0	T3	20	0033	0253	0473	2.0	6.0	34	25	- 64	+ 17.5	+ 20	1770
290.0	T3	10	0034	0254	0474	2.0	6.0	34	25	- 64	+ 17.5	+ 20	1770
290.0	T3	5	0035	0255	0475	2.0	6.0	34	25	- 64	+ 17.5	+ 20	1770
430.0	T3	20	0036	0256	0476	2.0	14.0	46	25	- 64	+ 17.5	+ 20	1825
430.0	T3	10	0037	0257	0477	2.0	14.0	46	25	- 64	+ 17.5	+ 20	1825
430.0	T3	5	0038	0258	0478	2.0	14.0	46	25	- 64	+ 17.5	+ 20	1825
850.0	T4	20	0039	0259	0479	4.0	16.0	60	22	- 80	+ 25	+ 25	2330
850.0	T4	10	0040	0260	0480	4.0	16.0	60	22	- 80	+ 25	+ 25	2330
10 WVDC at + 85 °C . . . 7 WVDC at + 125 °C													
20.0	T1	20	0041	0261	0481	1.0	2.0	6	175	- 32	+ 10.5	+ 12	820
20.0	T1	10	0042	0262	0482	1.0	2.0	6	175	- 32	+ 10.5	+ 12	820
20.0	T1	5	0043	0263	0483	1.0	2.0	6	175	- 32	+ 10.5	+ 12	820
47.0	T1	20	0044	0264	0484	1.0	2.0	13	100	- 36	+ 14	+ 16	855
47.0	T1	10	0045	0265	0485	1.0	2.0	13	100	- 36	+ 14	+ 16	855
47.0	T1	5	0046	0266	0486	1.0	2.0	13	100	- 36	+ 14	+ 16	855
100.0	T2	20	0047	0267	0487	1.0	4.0	15	60	- 36	+ 14	+ 16	1200
100.0	T2	10	0048	0268	0488	1.0	4.0	15	60	- 36	+ 14	+ 16	1200
100.0	T2	5	0049	0269	0489	1.0	4.0	15	60	- 36	+ 14	+ 16	1200
180.0	T2	20	0050	0270	0490	1.0	7.0	30	40	- 36	+ 14	+ 16	1365

Notes

* Dash number will include the letter "H" to indicate the optional vibration and shock requirements (i.e., 51 g random vibration, 80 g sinusoidal vibration and 500 g shock).

** For ripple current limits at various temperatures, voltages and frequencies, see Ripple Current Table.

Downloaded from Elcodis.com electronic components distributor

STANDARD/EXTENDED RATINGS: CLR79, M39006/22-XXXX

CAPACITANCE (µF)	CASE CODE	CAP. TOL. (± %)	PART NO. M39006/22-* FAILURE RATE LEVEL (%/1000 h)			MAX. DCL (µA) at		MAX. DF at + 25 °C (%)	MAX. IMP. at - 55 °C (Ω)	MAX. CAPACITANCE CHANGE (%) at			MAX.** RIPPLE CURRENT at + 85 °C 40 kHz (mA)
			M 1.0	P 0.1	R 0.01	+ 25 °C	+ 85 °C + 125 °C			- 55 °C	+ 85 °C	+ 125 °C	
10 WVDC at + 85 °C . . . 7 WVDC at + 125 °C													
180.0	T2	10	0051	0271	0491	1.0	7.0	30	40	- 36	+ 14	+ 16	1365
180.0	T2	5	0052	0272	0492	1.0	7.0	30	40	- 36	+ 14	+ 16	1365
250.0	T3	20	0053	0273	0493	2.0	10.0	30	30	- 40	+ 14	+ 16	1720
250.0	T3	10	0054	0274	0494	2.0	10.0	30	30	- 40	+ 14	+ 16	1720
250.0	T3	5	0055	0275	0495	2.0	10.0	30	30	- 40	+ 14	+ 16	1720
390.0	T3	20	0056	0276	0496	2.0	16.0	44	25	- 64	+ 17.5	+ 20	1800
390.0	T3	10	0057	0277	0497	2.0	16.0	44	25	- 64	+ 17.5	+ 20	1800
390.0	T3	5	0058	0278	0498	2.0	16.0	44	25	- 64	+ 17.5	+ 20	1800
750.0	T4	20	0059	0279	0499	4.0	16.0	50	23	- 80	+ 25	+ 25	2360
750.0	T4	10	0060	0280	0500	4.0	16.0	50	23	- 80	+ 25	+ 25	2360
15 WVDC at + 85 °C . . . 10 WVDC at + 125 °C													
15.0	T1	20	0061	0281	0501	1.0	2.0	5	155	- 24	+ 10.5	+ 12	780
15.0	T1	10	0062	0282	0502	1.0	2.0	5	155	- 24	+ 10.5	+ 12	780
15.0	T1	5	0063	0283	0503	1.0	2.0	5	155	- 24	+ 10.5	+ 12	780
33.0	T1	20	0064	0284	0504	1.0	2.0	10	90	- 28	+ 14	+ 16	820
33.0	T1	10	0065	0285	0505	1.0	2.0	10	90	- 28	+ 14	+ 16	820
33.0	T1	5	0066	0286	0506	1.0	2.0	10	90	- 28	+ 14	+ 16	820
70.0	T2	20	0067	0287	0507	1.0	4.0	13	75	- 28	+ 14	+ 16	1150
70.0	T2	10	0068	0288	0508	1.0	4.0	13	75	- 28	+ 14	+ 16	1150
70.0	T2	5	0069	0289	0509	1.0	4.0	13	75	- 28	+ 14	+ 16	1150
120.0	T2	20	0070	0290	0510	1.0	7.0	18	50	- 28	+ 17.5	+ 20	1450
120.0	T2	10	0071	0291	0511	1.0	7.0	18	50	- 28	+ 17.5	+ 20	1450
120.0	T2	5	0072	0292	0512	1.0	7.0	18	50	- 28	+ 17.5	+ 20	1450
170.0	T3	20	0073	0293	0513	2.0	10.0	25	35	- 32	+ 14	+ 16	1480
170.0	T3	10	0074	0294	0514	2.0	10.0	25	35	- 32	+ 14	+ 16	1480
170.0	T3	5	0075	0295	0515	2.0	10.0	25	35	- 32	+ 14	+ 16	1480
270.0	T3	20	0076	0296	0516	2.0	16.0	32	30	- 56	+ 17.5	+ 20	1740
270.0	T3	10	0077	0297	0517	2.0	16.0	32	30	- 56	+ 17.5	+ 20	1740
270.0	T3	5	0078	0298	0518	2.0	16.0	32	30	- 56	+ 17.5	+ 20	1740
540.0	T4	20	0079	0299	0519	6.0	24.0	40	23	- 80	+ 25	+ 25	2330
540.0	T4	10	0080	0300	0520	6.0	24.0	40	23	- 80	+ 25	+ 25	2330
25 WVDC at + 85 °C . . . 15 WVDC at + 125 °C													
10.0	T1	20	0081	0301	0521	1.0	2.0	4	220	- 16	+ 8	+ 9	715
10.0	T1	10	0082	0302	0522	1.0	2.0	4	220	- 16	+ 8	+ 9	715
10.0	T1	5	0083	0303	0523	1.0	2.0	4	220	- 16	+ 8	+ 9	715
22.0	T1	20	0084	0304	0524	1.0	2.0	6.6	140	- 20	+ 10.5	+ 12	825
22.0	T1	10	0085	0305	0525	1.0	2.0	6.6	140	- 20	+ 10.5	+ 12	825
22.0	T1	5	0086	0306	0526	1.0	2.0	6.6	140	- 20	+ 10.5	+ 12	825
50.0	T2	20	0087	0307	0527	1.0	2.0	11.0	70	- 28	+ 13	+ 15	1130
50.0	T2	10	0088	0308	0528	1.0	2.0	11.0	70	- 28	+ 13	+ 15	1130
50.0	T2	5	0089	0309	0529	1.0	2.0	11.0	70	- 28	+ 13	+ 15	1130
100.0	T2	20	0090	0310	0530	1.0	10.0	15	50	- 28	+ 13	+ 15	1435
100.0	T2	10	0091	0311	0531	1.0	10.0	15	50	- 28	+ 13	+ 15	1435
100.0	T2	5	0092	0312	0532	1.0	10.0	15	50	- 28	+ 13	+ 15	1435
120.0	T3	20	0093	0313	0533	2.0	6.0	21	38	- 32	+ 13	+ 15	1450
120.0	T3	10	0094	0314	0534	2.0	6.0	21	38	- 32	+ 13	+ 15	1450
120.0	T3	5	0095	0315	0535	2.0	6.0	21	38	- 32	+ 13	+ 15	1450
180.0	T3	20	0096	0316	0536	2.0	18.0	26	32	- 48	+ 13	+ 15	1525
180.0	T3	10	0097	0317	0537	2.0	18.0	26	32	- 48	+ 13	+ 15	1525
180.0	T3	5	0098	0318	0538	2.0	18.0	26	32	- 48	+ 13	+ 15	1525
350.0	T4	20	0099	0319	0539	7.0	28.0	35	24	- 70	+ 25	+ 25	1970
350.0	T4	10	0100	0320	0540	7.0	28.0	35	24	- 70	+ 25	+ 25	1970

Notes

* Dash number will include the letter "H" to indicate the optional vibration and shock requirements (i.e., 51 g random vibration, 80 g sinusoidal vibration and 500 g shock).

** For ripple current limits at various temperatures, voltages and frequencies, see Ripple Current Table.

Downloaded from Elcodis.com electronic components distributor

STANDARD/EXTENDED RATINGS: CLR79, M39006/22-XXXX

CAPACITANCE (µF)	CASE CODE	CAP. TOL. (± %)	PART NO. M39006/22-* FAILURE RATE LEVEL (%/1000 h)			MAX. DCL (µA) at		MAX. DF at + 25 °C (%)	MAX. IMP. at - 55 °C (Ω)	MAX. CAPACITANCE CHANGE (%) at			MAX.** RIPPLE CURRENT at + 85 °C 40 kHz (mA)
			M 1.0	P 0.1	R 0.01	+ 25 °C	+ 85 °C + 125 °C			- 55 °C	+ 85 °C	+ 125 °C	
30 WVDC at + 85 °C . . . 20 WVDC at + 125 °C													
8.0	T1	20	0101	0321	0541	1.0	2.0	4	275	- 16	+ 8	+ 12	640
8.0	T1	10	0102	0322	0542	1.0	2.0	4	275	- 16	+ 8	+ 12	640
8.0	T1	5	0103	0323	0543	1.0	2.0	4	275	- 16	+ 8	+ 12	640
15.0	T1	20	0104	0324	0544	1.0	2.0	5	175	- 20	+ 10.5	+ 12	780
15.0	T1	10	0105	0325	0545	1.0	2.0	5	175	- 20	+ 10.5	+ 12	780
15.0	T1	5	0106	0326	0546	1.0	2.0	5	175	- 20	+ 10.5	+ 12	780
40.0	T2	20	0107	0327	0547	1.0	5.0	10	65	- 24	+ 10.5	+ 12	1120
40.0	T2	10	0108	0328	0548	1.0	5.0	10	65	- 24	+ 10.5	+ 12	1120
40.0	T2	5	0109	0329	0549	1.0	5.0	10	65	- 24	+ 10.5	+ 12	1120
68.0	T2	20	0110	0330	0550	1.0	8.0	13	60	- 24	+ 13	+ 15	1285
68.0	T2	10	0111	0331	0551	1.0	8.0	13	60	- 24	+ 13	+ 15	1285
68.0	T2	5	0112	0332	0552	1.0	8.0	13	60	- 24	+ 13	+ 15	1285
100.0	T3	20	0113	0333	0553	2.0	12.0	17	40	- 28	+ 10.5	+ 12	1450
100.0	T3	10	0114	0334	0554	2.0	12.0	17	40	- 28	+ 10.5	+ 12	1450
100.0	T3	5	0115	0335	0555	2.0	12.0	17	40	- 28	+ 10.5	+ 12	1450
150.0	T3	20	0116	0336	0556	2.0	18.0	23	35	- 48	+ 13	+ 15	1525
150.0	T3	10	0117	0337	0557	2.0	18.0	23	35	- 48	+ 13	+ 15	1525
150.0	T3	5	0118	0338	0558	2.0	18.0	23	35	- 48	+ 13	+ 15	1525
300.0	T4	20	0119	0339	0559	8.0	32.0	31	25	- 60	+ 25	+ 25	1950
300.0	T4	10	0120	0340	0560	8.0	32.0	31	25	- 60	+ 25	+ 25	1950
50 WVDC at + 85 °C . . . 30 WVDC at + 125 °C													
5.0	T1	20	0121	0341	0561	1.0	2.0	3	400	- 16	+ 5	+ 6	580
5.0	T1	10	0122	0342	0562	1.0	2.0	3	400	- 16	+ 5	+ 6	580
5.0	T1	5	0123	0343	0563	1.0	2.0	3	400	- 16	+ 5	+ 6	580
10.0	T1	20	0124	0344	0564	1.0	2.0	4	250	- 24	+ 8	+ 9	715
10.0	T1	10	0125	0345	0565	1.0	2.0	4	250	- 24	+ 8	+ 9	715
10.0	T1	5	0126	0346	0566	1.0	2.0	4	250	- 24	+ 8	+ 9	715
25.0	T2	20	0127	0347	0567	1.0	5.0	8	95	- 20	+ 10.5	+ 12	1005
25.0	T2	10	0128	0348	0568	1.0	5.0	8	95	- 20	+ 10.5	+ 12	1005
25.0	T2	5	0129	0349	0569	1.0	5.0	8	95	- 20	+ 10.5	+ 12	1005
47.0	T2	20	0130	0350	0570	1.0	9.0	11	70	- 28	+ 13	+ 15	1155
47.0	T2	10	0131	0351	0571	1.0	9.0	11	70	- 28	+ 13	+ 15	1155
47.0	T2	5	0132	0352	0572	1.0	9.0	11	70	- 28	+ 13	+ 15	1155
60.0	T3	20	0133	0353	0573	2.0	12.0	12	45	- 16	+ 10.5	+ 12	1335
60.0	T3	10	0134	0354	0574	2.0	12.0	12	45	- 16	+ 10.5	+ 12	1335
60.0	T3	5	0135	0355	0575	2.0	12.0	12	45	- 16	+ 10.5	+ 12	1335
82.0	T3	20	0136	0356	0576	2.0	16.0	15	45	- 32	+ 13	+ 15	1400
82.0	T3	10	0137	0357	0577	2.0	16.0	15	45	- 32	+ 13	+ 15	1400
82.0	T3	5	0138	0358	0578	2.0	16.0	15	45	- 32	+ 13	+ 15	1400
160.0	T4	20	0139	0359	0579	8.0	32.0	17	27	- 50	+ 25	+ 25	1900
160.0	T4	10	0140	0360	0580	8.0	32.0	17	27	- 50	+ 25	+ 25	1900
60 WVDC at + 85 °C . . . 40 WVDC at + 125 °C													
4.0	T1	20	0141	0361	0581	1.0	2.0	2.8	550	- 16	+ 5	+ 6	525
4.0	T1	10	0142	0362	0582	1.0	2.0	2.8	550	- 16	+ 5	+ 6	525
4.0	T1	5	0143	0363	0583	1.0	2.0	2.8	550	- 16	+ 5	+ 6	525
8.2	T1	20	0144	0364	0584	1.0	2.0	4	275	- 24	+ 8	+ 9	625
8.2	T1	10	0145	0365	0585	1.0	2.0	4	275	- 24	+ 8	+ 9	625
8.2	T1	5	0146	0366	0586	1.0	2.0	4	275	- 24	+ 8	+ 9	625
20.0	T2	20	0147	0367	0587	1.0	5.0	7	105	- 16	+ 10.5	+ 12	930
20.0	T2	10	0148	0368	0588	1.0	5.0	7	105	- 16	+ 10.5	+ 12	930
20.0	T2	5	0149	0369	0589	1.0	5.0	7	105	- 16	+ 10.5	+ 12	930
39.0	T2	20	0150	0370	0590	1.0	9.0	10	90	- 28	+ 10.5	+ 12	1110

Notes

* Dash number will include the letter "H" to indicate the optional vibration and shock requirements (i.e., 51 g random vibration, 80 g sinusoidal vibration and 500 g shock).

** For ripple current limits at various temperatures, voltages and frequencies, see Ripple Current Table.

Downloaded from Elcodis.com electronic components distributor

STANDARD/EXTENDED RATINGS: CLR79, M39006/22-XXXX

CAPACITANCE (µF)	CASE CODE	CAP. TOL. (± %)	PART NO. M39006/22-* FAILURE RATE LEVEL (%/1000 h)			MAX. DCL (µA) at		MAX. DF at + 25 °C (%)	MAX. IMP. at - 55 °C (Ω)	MAX.CAPACITANCE CHANGE (%) at			MAX.** RIPPLE CURRENT at + 85 °C 40 kHz (mA)
			M 1.0	P 0.1	R 0.01	+ 25 °C	+ 85 °C + 125 °C			- 55 °C	+ 85 °C	+ 125 °C	
60 WVDC at + 85 °C . . . 40 WVDC at + 125 °C													
39.0	T2	10	0151	0371	0591	1.0	9.0	10	90	- 28	+ 10.5	+ 12	1110
39.0	T2	5	0152	0372	0592	1.0	9.0	10	90	- 28	+ 10.5	+ 12	1110
50.0	T3	20	0153	0373	0593	2.0	12.0	10	50	- 16	+ 10.5	+ 12	1330
50.0	T3	10	0154	0374	0594	2.0	12.0	10	50	- 16	+ 10.5	+ 12	1330
50.0	T3	5	0155	0375	0595	2.0	12.0	10	50	- 16	+ 10.5	+ 12	1330
68.0	T3	20	0156	0376	0596	2.0	16.0	13	50	- 32	+ 10.5	+ 12	1365
68.0	T3	10	0157	0377	0597	2.0	16.0	13	50	- 32	+ 10.5	+ 12	1365
68.0	T3	5	0158	0378	0598	2.0	16.0	13	50	- 32	+ 10.5	+ 12	1365
140.0	T4	20	0159	0379	0599	8.0	32.0	16	28	- 40	+ 20	+ 20	1850
140.0	T4	10	0160	0380	0600	8.0	32.0	16	28	- 40	+ 20	+ 20	1850
75 WVDC at + 85 °C . . . 50 WVDC at + 125 °C													
3.5	T1	20	0161	0381	0601	1.0	2.0	2.5	650	- 16	+ 5	+ 6	525
3.5	T1	10	0162	0382	0602	1.0	2.0	2.5	650	- 16	+ 5	+ 6	525
3.5	T1	5	0163	0383	0603	1.0	2.0	2.5	650	- 16	+ 5	+ 6	525
6.8	T1	20	0164	0384	0604	1.0	2.0	3.5	300	- 20	+ 8	+ 9	610
6.8	T1	10	0165	0385	0605	1.0	2.0	3.5	300	- 20	+ 8	+ 9	610
6.8	T1	5	0166	0386	0606	1.0	2.0	3.5	300	- 20	+ 8	+ 9	610
15.0	T2	20	0167	0387	0607	1.0	5.0	6	150	- 16	+ 8	+ 9	890
15.0	T2	10	0168	0388	0608	1.0	5.0	6	150	- 16	+ 8	+ 9	890
15.0	T2	5	0169	0389	0609	1.0	5.0	6	150	- 16	+ 8	+ 9	890
33.0	T2	20	0170	0390	0610	1.0	10.0	10	90	- 24	+ 10.5	+ 15	1000
33.0	T2	10	0171	0391	0611	1.0	10.0	10	90	- 24	+ 10.5	+ 15	1000
33.0	T2	5	0172	0392	0612	1.0	10.0	10	90	- 24	+ 10.5	+ 15	1000
40.0	T3	20	0173	0393	0613	2.0	12.0	9	60	- 16	+ 10.5	+ 12	1250
40.0	T3	10	0174	0394	0614	2.0	12.0	9	60	- 16	+ 10.5	+ 12	1250
40.0	T3	5	0175	0395	0615	2.0	12.0	9	60	- 16	+ 10.5	+ 12	1250
56.0	T3	20	0176	0396	0616	2.0	17.0	11	60	- 28	+ 10.5	+ 15	1335
56.0	T3	10	0177	0397	0617	2.0	17.0	11	60	- 28	+ 10.5	+ 15	1335
56.0	T3	5	0178	0398	0618	2.0	17.0	11	60	- 28	+ 10.5	+ 15	1335
110.0	T4	20	0179	0399	0619	9.0	36.0	12	29	- 35	+ 20	+ 20	1850
110.0	T4	10	0180	0400	0620	9.0	36.0	12	29	- 35	+ 20	+ 20	1850
100 WVDC at + 85 °C . . . 65 WVDC at + 125 °C													
2.5	T1	20	0181	0401	0621	1.0	2.0	2	950	- 16	+ 7	+ 8	505
2.5	T1	10	0182	0402	0622	1.0	2.0	2	950	- 16	+ 7	+ 8	505
2.5	T1	5	0183	0403	0623	1.0	2.0	2	950	- 16	+ 7	+ 8	505
4.7	T1	20	0184	0404	0624	1.0	2.0	3	500	- 16	+ 7	+ 8	565
4.7	T1	10	0185	0405	0625	1.0	2.0	3	500	- 16	+ 7	+ 8	565
4.7	T1	5	0186	0406	0626	1.0	2.0	3	500	- 16	+ 7	+ 8	565
11.0	T2	20	0187	0407	0627	1.0	4.0	5	200	- 16	+ 8	+ 8	835
11.0	T2	10	0188	0408	0628	1.0	4.0	5	200	- 16	+ 8	+ 8	835
11.0	T2	5	0189	0409	0629	1.0	4.0	5	200	- 16	+ 8	+ 8	835
22.0	T2	20	0190	0410	0630	1.0	9.0	7.5	100	- 16	+ 8	+ 8	965
22.0	T2	10	0191	0411	0631	1.0	9.0	7.5	100	- 16	+ 8	+ 8	965
22.0	T2	5	0192	0412	0632	1.0	9.0	7.5	100	- 16	+ 8	+ 8	965
30.0	T3	20	0193	0413	0633	2.0	12.0	7	80	- 16	+ 8	+ 8	1240
30.0	T3	10	0194	0414	0634	2.0	12.0	7	80	- 16	+ 8	+ 8	1240
30.0	T3	5	0195	0415	0635	2.0	12.0	7	80	- 16	+ 8	+ 8	1240
43.0	T3	20	0196	0416	0636	2.0	17.0	8.5	70	- 20	+ 8	+ 8	1335
43.0	T3	10	0197	0417	0637	2.0	17.0	8.5	70	- 20	+ 8	+ 8	1335
43.0	T3	5	0198	0418	0638	2.0	17.0	8.5	70	- 20	+ 8	+ 8	1335
86.0	T4	20	0199	0419	0639	9.0	36.0	10	30	- 25	+ 15	+ 15	1800
86.0	T4	10	0200	0420	0640	9.0	36.0	10	30	- 25	+ 15	+ 15	1800

Notes

* Dash number will include the letter "H" to indicate the optional vibration and shock requirements (i.e., 51 g random vibration, 80 g sinusoidal vibration and 500 g shock).

** For ripple current limits at various temperatures, voltages and frequencies, see Ripple Current Table.

Downloaded from Elcodis.com electronic components distributor

STANDARD/EXTENDED RATINGS: CLR79, M39006/22-XXXX

CAPACITANCE (µF)	CASE CODE	CAP. TOL. (± %)	PART NO. M39006/22-* FAILURE RATE LEVEL (%/1000 h)			MAX. DCL (µA) at		MAX. DF at + 25 °C (%)	MAX. IMP. at - 55 °C (Ω)	MAX. CAPACITANCE CHANGE (%) at			MAX.** RIPPLE CURRENT at + 85 °C 40 kHz (mA)
			M 1.0	P 0.1	R 0.01	+ 25 °C	+ 85 °C + 125 °C			- 55 °C	+ 85 °C	+ 125 °C	
125 WVDC at + 85 °C . . . 85 WVDC at + 125 °C													
1.7	T1	20	0201	0421	0641	1.0	2.0	2	1250	- 16	+ 7	+ 8	415
1.7	T1	10	0202	0422	0642	1.0	2.0	2	1250	- 16	+ 7	+ 8	415
1.7	T1	5	0203	0423	0643	1.0	2.0	2	1250	- 16	+ 7	+ 8	415
3.6	T1	20	0204	0424	0644	1.0	2.0	2.7	600	- 16	+ 7	+ 8	520
3.6	T1	10	0205	0425	0645	1.0	2.0	2.7	600	- 16	+ 7	+ 8	520
3.6	T1	5	0206	0426	0646	1.0	2.0	2.7	600	- 16	+ 7	+ 8	520
9.0	T2	20	0207	0427	0647	1.0	5.0	5	240	- 16	+ 7	+ 8	755
9.0	T2	10	0208	0428	0648	1.0	5.0	5	240	- 16	+ 7	+ 8	755
9.0	T2	5	0209	0429	0649	1.0	5.0	5	240	- 16	+ 7	+ 8	755
14.0	T2	20	0210	0430	0650	1.0	7.0	6	167	- 16	+ 7	+ 8	860
14.0	T2	10	0211	0431	0651	1.0	7.0	6	167	- 16	+ 7	+ 8	860
14.0	T2	5	0212	0432	0652	1.0	7.0	6	167	- 16	+ 7	+ 8	860
18.0	T3	20	0213	0433	0653	2.0	9.0	5	129	- 16	+ 7	+ 8	1130
18.0	T3	10	0214	0434	0654	2.0	9.0	5	129	- 16	+ 7	+ 8	1130
18.0	T3	5	0215	0435	0655	2.0	9.0	5	129	- 16	+ 7	+ 8	1130
25.0	T3	20	0216	0436	0656	2.0	13.0	6	93	- 16	+ 7	+ 8	1200
25.0	T3	10	0217	0437	0657	2.0	13.0	6	93	- 16	+ 7	+ 8	1200
25.0	T3	5	0218	0438	0658	2.0	13.0	6	93	- 16	+ 7	+ 8	1200
56.0	T4	20	0219	0439	0659	10.0	40.0	6.5	32	- 25	+ 15	+ 15	1800
56.0	T4	10	0220	0440	0660	10.0	40.0	6.5	32	- 25	+ 15	+ 15	1800

Notes

* Dash number will include the letter "H" to indicate the optional vibration and shock requirements (i.e., 51 g random vibration, 80 g sinusoidal vibration and 500 g shock).

** For ripple current limits at various temperatures, voltages and frequencies, see Ripple Current Table.

STANDARD/EXTENDED RATINGS: CLR81, M39006/25-XXXX

CAPACITANCE (µF)	CASE CODE	CAP. TOL. (± %)	PART NO. M39006/25-* FAILURE RATE LEVEL (%/1000 h)			MAX. DCL (µA) at		MAX. DF at + 25 °C (%)	MAX. IMP. at - 55 °C (Ω)	MAX. CAPACITANCE CHANGE (%) at			MAX.** RIPPLE CURRENT at + 85 °C 40 kHz (mA)
			M 1.0	P 0.1	R 0.01	+ 25 °C	+ 85 °C + 125 °C			- 55 °C	+ 85 °C	+ 125 °C	
6 WVDC at + 85 °C . . . 4 WVDC at + 125 °C													
220.0	T1	20	0001	0089	0177	2.0	9.0	50	36	- 64	+ 13	+ 16	1000
220.0	T1	10	0002	0090	0178	2.0	9.0	50	36	- 64	+ 13	+ 16	1000
820.0	T2	20	0003	0091	0179	3.0	14.0	155	18	- 88	+ 16	+ 20	1500
820.0	T2	10	0004	0092	0180	3.0	14.0	155	18	- 88	+ 16	+ 20	1500
1500.0	T3	20	0005	0093	0181	5.0	20.0	172	18	- 90	+ 20	+ 25	1900
1500.0	T3	10	0006	0094	0182	5.0	20.0	172	18	- 90	+ 20	+ 25	1900
2200.0	T4	20	0007	0095	0183	6.0	24.0	170	13	- 90	+ 25	+ 30	2300
2200.0	T4	10	0008	0096	0184	6.0	24.0	170	13	- 90	+ 25	+ 30	2300
8 WVDC at + 85 °C . . . 5 WVDC at + 125 °C													
180.0	T1	20	0009	0097	0185	2.0	9.0	41	45	- 60	+ 13	+ 16	1000
180.0	T1	10	0010	0098	0186	2.0	9.0	41	45	- 60	+ 13	+ 16	1000
680.0	T2	20	0011	0099	0187	3.0	14.0	130	22	- 83	+ 16	+ 20	1500
680.0	T2	10	0012	0100	0188	3.0	14.0	130	22	- 83	+ 16	+ 20	1500
1500.0	T3	20	0013	0101	0189	5.0	20.0	170	18	- 90	+ 20	+ 25	1900
1500.0	T3	10	0014	0102	0190	5.0	20.0	170	18	- 90	+ 20	+ 25	1900
1800.0	T4	20	0015	0103	0191	7.0	25.0	138	14	- 90	+ 25	+ 30	2300
1800.0	T4	10	0016	0104	0192	7.0	25.0	138	14	- 90	+ 25	+ 30	2300

Notes

* Dash number will include the letter "H" to indicate the optional vibration and shock requirements (i.e., 51 g random vibration, 80 g sinusoidal vibration and 500 g shock).

** For ripple current limits at various temperatures, voltages and frequencies, see Ripple Current Table.

Downloaded from Elcodis.com electronic components distributor

STANDARD/EXTENDED RATINGS: CLR81, M39006/25-XXXX

CAPACITANCE (µF)	CASE CODE	CAP. TOL. (± %)	PART NO. M39006/25-* FAILURE RATE LEVEL (%/1000 h)			MAX. DCL (µA) at		MAX. DF at + 25 °C (%)	MAX. IMP. at - 55 °C (Ω)	MAX. CAPACITANCE CHANGE (%) at			MAX.** RIPPLE CURRENT at + 85 °C 40 kHz (mA)
			M 1.0	P 0.1	R 0.01	+ 25 °C	+ 85 °C + 125 °C			- 55 °C	+ 85 °C	+ 125 °C	
10 WVDC at + 85 °C . . . 7 WVDC at + 125 °C													
150.0	T1	20	0017	0105	0193	2.0	9.0	34	54	- 55	+ 13	+ 16	900
150.0	T1	10	0018	0106	0194	2.0	9.0	34	54	- 55	+ 13	+ 16	900
560.0	T2	20	0019	0107	0195	3.0	16.0	106	27	- 77	+ 16	+ 20	1450
560.0	T2	10	0020	0108	0196	3.0	16.0	106	27	- 77	+ 16	+ 20	1450
1200.0	T3	20	0021	0109	0197	5.0	20.0	137	18	- 88	+ 20	+ 25	1850
1200.0	T3	10	0022	0110	0198	5.0	20.0	137	18	- 88	+ 20	+ 25	1850
1500.0	T4	20	0023	0111	0199	7.0	25.0	114	15	- 88	+ 25	+ 30	2300
1500.0	T4	10	0024	0112	0200	7.0	25.0	114	15	- 88	+ 25	+ 30	2300
15 WVDC at + 85 °C . . . 10 WVDC at + 125 °C													
100.0	T1	20	0025	0113	0201	2.0	9.0	30	72	- 44	+ 13	+ 16	900
100.0	T1	10	0026	0114	0202	2.0	9.0	30	72	- 44	+ 13	+ 16	900
390.0	T2	20	0027	0115	0203	3.0	16.0	74	31	- 66	+ 16	+ 20	1450
390.0	T2	10	0028	0116	0204	3.0	16.0	74	31	- 66	+ 16	+ 20	1450
820.0	T3	20	0029	0117	0205	6.0	24.0	111	22	- 77	+ 20	+ 25	1800
820.0	T3	10	0030	0118	0206	6.0	24.0	111	22	- 77	+ 20	+ 25	1800
1000.0	T4	20	0031	0119	0207	8.0	32.0	92	17	- 77	+ 25	+ 30	2300
1000.0	T4	10	0032	0120	0208	8.0	32.0	92	17	- 77	+ 25	+ 30	2300
25 WVDC at + 85 °C . . . 15 WVDC at + 125 °C													
68.0	T1	20	0033	0121	0209	2.0	9.0	22	90	- 40	+ 12	+ 15	850
68.0	T1	10	0034	0122	0210	2.0	9.0	22	90	- 40	+ 12	+ 15	850
270.0	T2	20	0035	0123	0211	3.0	16.0	55	33	- 62	+ 13	+ 16	1400
270.0	T2	10	0036	0124	0212	3.0	16.0	55	33	- 62	+ 13	+ 16	1400
560.0	T3	20	0037	0125	0213	7.0	28.0	76	24	- 72	+ 20	+ 25	1750
560.0	T3	10	0038	0126	0214	7.0	28.0	76	24	- 72	+ 20	+ 25	1750
680.0	T4	20	0039	0127	0215	8.0	32.0	63	19	- 72	+ 25	+ 30	2100
680.0	T4	10	0040	0128	0216	8.0	32.0	63	19	- 72	+ 25	+ 30	2100
30 WVDC at + 85 °C . . . 20 WVDC at + 125 °C													
56.0	T1	20	0041	0129	0217	2.0	9.0	22	100	- 38	+ 12	+ 15	800
56.0	T1	10	0042	0130	0218	2.0	9.0	22	100	- 38	+ 12	+ 15	800
220.0	T2	20	0043	0131	0219	3.0	16.0	42	36	- 60	+ 13	+ 16	1200
220.0	T2	10	0044	0132	0220	3.0	16.0	42	36	- 60	+ 13	+ 16	1200
470.0	T3	20	0045	0133	0221	8.0	32.0	64	25	- 65	+ 20	+ 25	1500
470.0	T3	10	0046	0134	0222	8.0	32.0	64	25	- 65	+ 20	+ 25	1500
560.0	T4	20	0047	0135	0223	9.0	36.0	55	20	- 65	+ 25	+ 30	2000
560.0	T4	10	0048	0136	0224	9.0	36.0	55	20	- 65	+ 25	+ 30	2000
50 WVDC at + 85 °C . . . 30 WVDC at + 125 °C													
33.0	T1	20	0049	0137	0225	2.0	9.0	12.3	135	- 29	+ 10	+ 12	700
33.0	T1	10	0050	0138	0226	2.0	9.0	12.3	135	- 29	+ 10	+ 12	700
120.0	T2	20	0051	0139	0227	4.0	24.0	22.5	49	- 42	+ 12	+ 15	1200
120.0	T2	10	0052	0140	0228	4.0	24.0	22.5	49	- 42	+ 12	+ 15	1200
270.0	T3	20	0053	0141	0229	8.0	32.0	37	29	- 46	+ 20	+ 25	1450
270.0	T3	10	0054	0142	0230	8.0	32.0	37	29	- 46	+ 20	+ 25	1450
330.0	T4	20	0055	0143	0231	9.0	36.0	38	22	- 46	+ 25	+ 30	1900
330.0	T4	10	0056	0144	0232	9.0	36.0	38	22	- 46	+ 25	+ 30	1900
60 WVDC at + 85 °C . . . 40 WVDC at + 125 °C													
27.0	T1	20	0057	0145	0233	3.0	12.0	10.2	144	- 24	+ 10	+ 12	700
27.0	T1	10	0058	0146	0234	3.0	12.0	10.2	144	- 24	+ 10	+ 12	700
100.0	T2	20	0059	0147	0235	4.0	20.0	19	54	- 36	+ 12	+ 15	1100
100.0	T2	10	0060	0148	0236	4.0	20.0	19	54	- 36	+ 12	+ 15	1100
220.0	T3	20	0061	0149	0237	8.0	32.0	30	29	- 40	+ 16	+ 20	1400
220.0	T3	10	0062	0150	0238	8.0	32.0	30	29	- 40	+ 16	+ 20	1400
270.0	T4	20	0063	0151	0239	9.0	36.0	27	23	- 45	+ 20	+ 25	1850
270.0	T4	10	0064	0152	0240	9.0	36.0	27	23	- 45	+ 20	+ 25	1850

Notes

* Dash number will include the letter "H" to indicate the optional vibration and shock requirements (i.e., 51 g random vibration, 80 g sinusoidal vibration and 500 g shock).

** For ripple current limits at various temperatures, voltages and frequencies, see Ripple Current Table.

Downloaded from Elcodis.com electronic components distributor

STANDARD/EXTENDED RATINGS: CLR81, M39006/25-XXXX

CAPACITANCE (µF)	CASE CODE	CAP. TOL. (± %)	PART NO. M39006/25-* FAILURE RATE LEVEL (%/1000 h)			MAX. DCL (µA) at		MAX. DF at + 25 °C (%)	MAX. IMP. at - 55 °C (Ω)	MAX.. CAPACITANCE CHANGE (%) at			MAX.** RIPPLE CURRENT at + 85 °C 40 kHz (mA)
			M 1.0	P 0.1	R 0.01	+ 25 °C	+ 85 °C + 125 °C			- 55 °C	+ 85 °C	+ 125 °C	
75 WVDC at + 85 °C . . . 50 WVDC at + 125 °C													
22.0	T1	20	0065	0153	0241	3.0	12.0	8.5	157	- 19	+ 10	+ 12	600
22.0	T1	10	0066	0154	0242	3.0	12.0	8.5	157	- 19	+ 10	+ 12	600
82.0	T2	20	0067	0155	0243	4.0	24.0	15.2	63	- 30	+ 12	+ 15	1000
82.0	T2	10	0068	0156	0244	4.0	24.0	15.2	63	- 30	+ 12	+ 15	1000
180.0	T3	20	0069	0157	0245	9.0	36.0	24.4	30	- 35	+ 16	+ 20	1300
180.0	T3	10	0070	0158	0246	9.0	36.0	24.4	30	- 35	+ 16	+ 20	1300
220.0	T4	20	0071	0159	0247	10.0	40.0	37.0	24	- 40	+ 20	+ 25	1800
220.0	T4	10	0072	0160	0248	10.0	40.0	37.0	24	- 40	+ 20	+ 25	1800
100 WVDC at + 85 °C . . . 65 WVDC at + 125 °C													
10.0	T1	20	0073	0161	0249	3.0	12.0	4.5	200	- 17	+ 10	+ 12	800
10.0	T1	10	0074	0162	0250	3.0	12.0	4.5	200	- 17	+ 10	+ 12	800
39.0	T2	20	0075	0163	0251	5.0	24.0	10.4	80	- 20	+ 12	+ 15	1300
39.0	T2	10	0076	0164	0252	5.0	24.0	10.4	80	- 20	+ 12	+ 15	1300
68.0	T3	20	0077	0165	0253	10.0	40.0	11.3	40	- 30	+ 14	+ 16	1600
68.0	T3	10	0078	0166	0254	10.0	40.0	11.3	40	- 30	+ 14	+ 16	1600
120.0	T4	20	0079	0167	0255	12.0	48.0	25	30	- 35	+ 15	+ 17	2000
120.0	T4	10	0080	0168	0256	12.0	48.0	25	30	- 35	+ 15	+ 17	2000
125 WVDC at + 85 °C . . . 85 WVDC at + 125 °C													
6.8	T1	20	0081	0169	0257	3.0	12.0	6.0	300	- 14	+ 10	+ 12	700
6.8	T1	10	0082	0170	0258	3.0	12.0	6.0	300	- 14	+ 10	+ 12	700
27.0	T2	20	0083	0171	0259	5.0	24.0	7.2	90	- 18	+ 12	+ 15	1200
27.0	T2	10	0084	0172	0260	5.0	24.0	7.2	90	- 18	+ 12	+ 15	1200
47.0	T3	20	0085	0173	0261	10.0	40.0	7.9	50	- 26	+ 14	+ 16	1500
47.0	T3	10	0086	0174	0262	10.0	40.0	7.9	50	- 26	+ 14	+ 16	1500
82.0	T4	20	0087	0175	0263	12.0	48.0	17.4	32	- 30	+ 15	+ 17	1900
82.0	T4	10	0088	0176	0264	12.0	48.0	17.4	32	- 30	+ 15	+ 17	1900

Notes

* Dash number will include the letter "H" to indicate the optional vibration and shock requirements (i.e., 51 g random vibration, 80 g sinusoidal vibration and 500 g shock).

** For ripple current limits at various temperatures, voltages and frequencies, see Ripple Current Table.

CLR79, CLR81 RIPPLE CURRENT MULTIPLIERS VS. FREQUENCY, TEMPERATURE AND APPLIED PEAK VOLTAGE

FREQUENCY OF APPLIED RIPPLE CURRENT		120 Hz				800 Hz				1 kHz				10 kHz				40 kHz				100 kHz			
AMBIENT STILL AIR		TEMP °C				TEMP °C				TEMP °C				TEMP °C				TEMP °C				TEMP °C			
		≤ 55	85	105	125	≤ 55	85	105	125	≤ 55	85	105	125	≤ 55	85	105	125	≤ 55	85	105	125	≤ 55	85	105	125
% of APPLIED VOLTAGE	100 %	0.60	0.39	-	-	0.71	0.43	-	-	0.72	0.46	-	-	0.88	0.55	-	-	1.0	0.63	-	-	1.1	0.69	-	-
	90 %	0.60	0.46	-	-	0.71	0.55	-	-	0.72	0.55	-	-	0.88	0.67	-	-	1.0	0.77	-	-	1.1	0.85	-	-
	80 %	0.60	0.52	0.35	-	0.71	0.62	0.42	-	0.72	0.62	0.42	-	0.88	0.76	0.52	-	1.0	0.87	0.59	-	1.1	0.96	0.65	-
	70 %	0.60	0.58	0.44	-	0.71	0.69	0.52	-	0.72	0.70	0.52	-	0.88	0.85	0.64	-	1.0	0.97	0.73	-	1.1	1.07	0.80	-
	66 2/3 %	0.60	0.60	0.46	0.27	0.71	0.71	0.55	0.32	0.72	0.72	0.55	0.32	0.88	0.88	0.68	0.40	1.0	1.0	0.77	0.45	1.1	1.1	0.85	0.50

Notes

1. At + 125 °C the rated voltage of the capacitors decreases to 66 2/3 percent of the + 85 °C rated voltage.
2. The peak of the applied AC ripple voltage plus the applied DC voltage must not exceed the DC voltage rating of the capacitor eitherforward or reverse.
3. The ripple current listed represents a rating calculated using a maximum internal temperature rise (ΔT) of + 50 °C at 40 kHz at + 85 °C ambient with a maximum peak rated voltage of 66 2/3 percent of the + 85 °C peak voltage rating.
4. The maximum allowable internal temperature rise (ΔT) decreases linearly to a calculated + 10 °C rise at + 125 °C ambient.
5. The internal temperature rise is directly proportional to the equivalent series resistance of the capacitor and equivalent series resistance increases with decreasing frequency.

Downloaded from Elcodis.com electronic components distributor

STANDARD/EXTENDED RATINGS: CLR90, M39006/30-XXXX

CAPACITANCE (µF)	CASE CODE	CAP. TOL. (± %)	PART NO. M39006/30-* FAILURE RATE LEVEL (%/1000 h)			MAX. DCL (µA) at		MAX. DF at + 25 °C (%)	MAX. IMP. at - 55 °C (Ω)	MAX. CAPACITANCE CHANGE (%) at			MAX. ESR at + 25 °C 120 Hz (Ω)
			M 1.0	P 0.1	R 0.01	+ 25 °C	+ 85 °C + 125 °C			- 55 °C	+ 85 °C	+ 125 °C	
6 WVDC at + 85 °C . . . 4 WVDC at + 125 °C													
30.0	T1	20	0001	0221	0441	1.0	2.0	4.5	100	- 40	+ 10.5	+ 12	1.99
30.0	T1	10	0002	0222	0442	1.0	2.0	4.5	100	- 40	+ 10.5	+ 12	1.99
30.0	T1	5	0003	0223	0443	1.0	2.0	4.5	100	- 40	+ 10.5	+ 12	1.99
68.0	T1	20	0004	0224	0444	1.0	2.0	7.5	60	- 40	+ 14	+ 16	1.58
68.0	T1	10	0005	0225	0445	1.0	2.0	7.5	60	- 40	+ 14	+ 16	1.58
68.0	T1	5	0006	0226	0446	1.0	2.0	7.5	60	- 40	+ 14	+ 16	1.58
140.0	T2	20	0007	0227	0447	1.0	3.0	10.5	40	- 40	+ 14	+ 16	0.99
140.0	T2	10	0008	0228	0448	1.0	3.0	10.5	40	- 40	+ 14	+ 16	0.99
140.0	T2	5	0009	0229	0449	1.0	3.0	10.5	40	- 40	+ 14	+ 16	0.99
270.0	T2	20	0010	0230	0450	1.0	6.5	22.5	25	- 44	+ 17.5	+ 20	1.11
270.0	T2	10	0011	0231	0451	1.0	6.5	22.5	25	- 44	+ 17.5	+ 20	1.11
270.0	T2	5	0012	0232	0452	1.0	6.5	22.5	25	- 44	+ 17.5	+ 20	1.11
330.0	T3	20	0013	0233	0453	2.0	7.9	18.0	20	- 44	+ 14	+ 16	0.73
330.0	T3	10	0014	0234	0454	2.0	7.9	18.0	20	- 44	+ 14	+ 16	0.73
330.0	T3	5	0015	0235	0455	2.0	7.9	18.0	20	- 44	+ 14	+ 16	0.73
560.0	T3	20	0016	0236	0456	2.0	13.0	27.5	25	- 64	+ 17.5	+ 20	0.65
560.0	T3	10	0017	0237	0457	2.0	13.0	27.5	25	- 64	+ 17.5	+ 20	0.65
560.0	T3	5	0018	0238	0458	2.0	13.0	27.5	25	- 64	+ 17.5	+ 20	0.65
1200.0	T4	20	0019	0239	0459	3.0	14.0	45.0	20	- 80	+ 25	+ 25	0.50
1200.0	T4	10	0020	0240	0460	3.0	14.0	45.0	20	- 80	+ 25	+ 25	0.50
8 WVDC at + 85 °C . . . 5 WVDC at + 125 °C													
25	T1	20	0021	0241	0461	1.0	2.0	3.75	100	- 40	+ 10.5	+ 12	1.99
25	T1	10	0022	0242	0462	1.0	2.0	3.75	100	- 40	+ 10.5	+ 12	1.99
25	T1	5	0023	0243	0463	1.0	2.0	3.75	100	- 40	+ 10.5	+ 12	1.99
56	T1	20	0024	0244	0464	1.0	2.0	7.0	59	- 40	+ 14	+ 16	1.66
56	T1	10	0025	0245	0465	1.0	2.0	7.0	59	- 40	+ 14	+ 16	1.66
56	T1	5	0226	0246	0466	1.0	2.0	7.0	59	- 40	+ 14	+ 16	1.66
120	T2	20	0027	0247	0467	1.0	2.0	10.0	50	- 44	+ 17.5	+ 20	1.11
120	T2	10	0028	0248	0468	1.0	2.0	10.0	50	- 44	+ 17.5	+ 20	1.11
120	T2	5	0029	0249	0469	1.0	2.0	10.0	50	- 44	+ 17.5	+ 20	1.11
220	T2	20	0030	0250	0470	1.0	7.0	18.5	30	- 44	+ 17.5	+ 20	1.12
220	T2	10	0031	0251	0471	1.0	7.0	18.5	30	- 44	+ 17.5	+ 20	1.12
220	T2	5	0032	0252	0472	1.0	7.0	18.5	30	- 44	+ 17.5	+ 20	1.12
290	T3	20	0033	0253	0473	2.0	6.0	17.0	25	- 64	+ 17.5	+ 20	0.78
290	T3	10	0034	0254	0474	2.0	6.0	17.0	25	- 64	+ 17.5	+ 20	0.78
290	T3	5	0035	0255	0475	2.0	6.0	17.0	25	- 64	+ 17.5	+ 20	0.78
430	T3	20	0036	0256	0476	2.0	14.0	23.0	25	- 64	+ 17.5	+ 20	0.71
430	T3	10	0037	0257	0477	2.0	14.0	23.0	25	- 64	+ 17.5	+ 20	0.71
430	T3	5	0038	0258	0478	2.0	14.0	23.0	25	- 64	+ 17.5	+ 20	0.71
850	T4	20	0039	0259	0479	4.0	16.0	30.0	22	- 80	+ 25	+ 25	0.47
850	T4	10	0040	0260	0480	4.0	16.0	30.0	22	- 80	+ 25	+ 25	0.47
10 WVDC at + 85 °C . . . 7 WVDC at + 125 °C													
20	T1	20	0041	0261	0481	1.0	2.0	3.0	175	- 32	+ 10.5	+ 12	1.99
20	T1	10	0042	0262	0482	1.0	2.0	3.0	175	- 32	+ 10.5	+ 12	1.99
20	T1	5	0043	0263	0483	1.0	2.0	3.0	175	- 32	+ 10.5	+ 12	1.99
47	T1	20	0044	0264	0484	1.0	2.0	6.5	100	- 36	+ 14	+ 16	1.84
47	T1	10	0045	0265	0485	1.0	2.0	6.5	100	- 36	+ 14	+ 16	1.84
47	T1	5	0046	0266	0486	1.0	2.0	6.5	100	- 36	+ 14	+ 16	1.84
100	T2	20	0047	0267	0487	1.0	4.0	7.5	60	- 36	+ 14	+ 16	0.99
100	T2	10	0048	0268	0488	1.0	4.0	7.5	60	- 36	+ 14	+ 16	0.99
100	T2	5	0049	0269	0489	1.0	4.0	7.5	60	- 36	+ 14	+ 16	0.99
180	T2	20	0050	0270	0490	1.0	7.0	15.0	40	- 36	+ 14	+ 16	1.11
180	T2	10	0051	0271	0491	1.0	7.0	15.0	40	- 36	+ 14	+ 16	1.11
180	T2	5	0052	0272	0492	1.0	7.0	15.0	40	- 36	+ 14	+ 16	1.11
250	T3	20	0053	0273	0493	2.0	10.0	15.0	30	- 40	+ 14	+ 16	0.80
250	T3	10	0054	0274	0494	2.0	10.0	15.0	30	- 40	+ 14	+ 16	0.80
250	T3	5	0055	0275	0495	2.0	10.0	15.0	30	- 40	+ 14	+ 16	0.80
390	T3	20	0056	0276	0496	2.0	16.0	22.0	25	- 64	+ 17.5	+ 20	0.75

Note

* Dash number will include the letter "H"to indicate the optional vibration and shock requirements (i.e., 51 g random vibration, 80 g sinusoidal vibration and 500 g shock).

Downloaded from Elcodis.com electronic components distributor

STANDARD/EXTENDED RATINGS: CLR90, M39006/30-XXXX

CAPACITANCE (µF)	CASE CODE	CAP. TOL. (± %)	PART NO. M39006/30-* FAILURE RATE LEVEL (%/1000 h)			MAX. DCL (µA) at		MAX. DF at + 25 °C (%)	MAX. IMP. at - 55 °C (Ω)	MAX. CAPACITANCE CHANGE (%) at			MAX. ESR at + 25 °C 120 Hz (Ω)
			M 1.0	P 0.1	R 0.01	+ 25 °C	+ 85 °C + 125 °C			- 55 °C	+ 85 °C	+ 125 °C	
10 WVDC at + 85 °C . . . 7 WVDC at + 125 °C													
390	T3	10	0057	0277	0497	2.0	16.0	22.0	25	- 64	+ 17.5	+ 20	0.75
390	T3	5	0058	0278	0498	2.0	16.0	22.0	25	- 64	+ 17.5	+ 20	0.75
750	T4	20	0059	0279	0499	4.0	16.0	25.0	23	- 80	+ 25	+ 25	0.44
750	T4	10	0060	0280	0500	4.0	16.0	25.0	23	- 80	+ 25	+ 25	0.44
15 WVDC at + 85 °C . . . 10 WVDC at + 125 °C													
15	T1	20	0061	0281	0501	1.0	2.0	2.5	155	- 24	+ 10.5	+ 12	1.99
15	T1	10	0062	0282	0502	1.0	2.0	2.5	155	- 24	+ 10.5	+ 12	1.99
15	T1	5	0063	0283	0503	1.0	2.0	2.5	155	- 24	+ 10.5	+ 12	1.99
33	T1	20	0064	0284	0504	1.0	2.0	5.0	90	- 28	+ 14	+ 16	1.66
33	T1	10	0065	0285	0505	1.0	2.0	5.0	90	- 28	+ 14	+ 16	1.66
33	T1	5	0066	0286	0506	1.0	2.0	5.0	90	- 28	+ 14	+ 16	1.66
70	T2	20	0067	0287	0507	1.0	4.0	6.5	75	- 28	+ 14	+ 16	1.11
70	T2	10	0068	0288	0508	1.0	4.0	6.5	75	- 28	+ 14	+ 16	1.11
70	T2	5	0069	0289	0509	1.0	4.0	6.5	75	- 28	+ 14	+ 16	1.11
120	T2	20	0070	0290	0510	1.0	7.0	9.0	50	- 28	+ 17.5	+ 20	1.12
120	T2	10	0071	0291	0511	1.0	7.0	9.0	50	- 28	+ 17.5	+ 20	1.12
120	T2	5	0072	0292	0512	1.0	7.0	9.0	50	- 28	+ 17.5	+ 20	1.12
170	T3	20	0073	0293	0513	2.0	10.0	12.5	35	- 32	+ 14	+ 16	0.78
170	T3	10	0074	0294	0514	2.0	10.0	12.5	35	- 32	+ 14	+ 16	0.78
170	T3	5	0075	0295	0515	2.0	10.0	12.5	35	- 32	+ 14	+ 16	0.78
270	T3	20	0076	0296	0516	2.0	16.0	16.0	30	- 56	+ 17.5	+ 20	0.71
270	T3	10	0077	0297	0517	2.0	16.0	16.0	30	- 56	+ 17.5	+ 20	0.71
270	T3	5	0078	0298	0518	2.0	16.0	16.0	30	- 56	+ 17.5	+ 20	0.71
540	T4	20	0079	0299	0519	6.0	24.0	20.0	23	- 80	+ 25	+ 25	0.47
540	T4	10	0080	0300	0520	6.0	24.0	20.0	23	- 80	+ 25	+ 25	0.47
25 WVDC at + 85 °C . . . 15 WVDC at + 125 °C													
10	T1	20	0081	0301	0521	1.0	2.0	2.0	220	- 16	+ 8	+ 9	2.66
10	T1	10	0082	0302	0522	1.0	2.0	2.0	220	- 16	+ 8	+ 9	2.66
10	T1	5	0083	0303	0523	1.0	2.0	2.0	220	- 16	+ 8	+ 9	2.66
22	T1	20	0084	0304	0524	1.0	2.0	3.3	140	- 20	+ 10.5	+ 12	1.99
22	T1	10	0085	0305	0525	1.0	2.0	3.3	140	- 20	+ 10.5	+ 12	1.99
22	T1	5	0086	0306	0526	1.0	2.0	3.3	140	- 20	+ 10.5	+ 12	1.99
50	T2	20	0087	0307	0527	1.0	2.0	5.5	70	- 28	+ 13	+ 15	1.46
50	T2	10	0088	0308	0528	1.0	2.0	5.5	70	- 28	+ 13	+ 15	1.46
50	T2	5	0089	0309	0529	1.0	2.0	5.5	70	- 28	+ 13	+ 15	1.46
100	T2	20	0090	0310	0530	1.0	10.0	7.5	50	- 28	+ 13	+ 15	0.99
100	T2	10	0091	0311	0531	1.0	10.0	7.5	50	- 28	+ 13	+ 15	0.99
100	T2	5	0092	0312	0532	1.0	10.0	7.5	50	- 28	+ 13	+ 15	0.99
120	T3	20	0093	0313	0533	2.0	6.0	10.5	38	- 32	+ 13	+ 15	1.16
120	T3	10	0094	0314	0534	2.0	6.0	10.5	38	- 32	+ 13	+ 15	1.16
120	T3	5	0095	0315	0535	2.0	6.0	10.5	38	- 32	+ 13	+ 15	1.16
180	T3	20	0096	0316	0536	2.0	18.0	13.0	32	- 48	+ 13	+ 15	0.96
180	T3	10	0097	0317	0537	2.0	18.0	13.0	32	- 48	+ 13	+ 15	0.96
180	T3	5	0098	0318	0538	2.0	18.0	13.0	32	- 48	+ 13	+ 15	0.96
350	T4	20	0099	0319	0539	7.0	28.0	17.5	24	- 70	+ 25	+ 25	0.67
350	T4	10	0100	0320	0540	7.0	28.0	17.5	24	- 70	+ 25	+ 25	0.67
30 WVDC at + 85 °C . . . 20 WVDC at + 125 °C													
8	T1	20	0101	0321	0541	1.0	2.0	2.0	275	- 16	+ 8	+ 12	3.32
8	T1	10	0102	0322	0542	1.0	2.0	2.0	275	- 16	+8	+ 12	3.32
8	T1	5	0103	0323	0543	1.0	2.0	2.0	275	- 16	+8	+ 12	3.32
15	T1	20	0104	0324	0544	1.0	2.0	2.5	175	- 20	+10.5	+ 12	2.21
15	T1	10	0105	0325	0545	1.0	2.0	2.5	175	- 20	+10.5	+ 12	2.21
15	T1	5	0106	0326	0546	1.0	2.0	2.5	175	- 20	+10.5	+ 12	2.21
40	T2	20	0107	0327	0547	1.0	5.0	5.0	65	- 24	+10.5	+ 12	1.66
40	T2	10	0108	0328	0548	1.0	5.0	5.0	65	- 24	+10.5	+ 12	0.66
40	T2	5	0109	0329	0549	1.0	5.0	5.0	65	- 24	+10.5	+ 12	0.66
68	T2	20	0110	0330	0550	1.0	8.0	6.5	60	- 24	+13	+ 15	1.27

Note

* Dash number will include the letter "H"to indicate the optional vibration and shock requirements (i.e., 51 g random vibration, 80 g sinusoidal vibration and 500 g shock).

Downloaded from Elcodis.com electronic components distributor

STANDARD/EXTENDED RATINGS: CLR90, M39006/30-XXXX

CAPACITANCE (µF)	CASE CODE	CAP. TOL. (± %)	PART NO. M39006/30-* FAILURE RATE LEVEL (%/1000 h)			MAX. DCL (µA) at		MAX. DF at + 25 °C (%)	MAX. IMP. at - 55 °C (Ω)	MAX. CAPACITANCE CHANGE (%) at			MAX. ESR at + 25 °C 120 Hz (Ω)
			M 1.0	P 0.1	R 0.01	+ 25 °C	+ 85 °C + 125 °C			- 55 °C	+ 85 °C	+ 125 °C	
30 WVDC at + 85 °C . . . 20 WVDC at + 125 °C													
68	T2	10	0111	0331	0551	1.0	8.0	6.5	60	- 24	+ 13	+ 15	1.27
68	T2	5	0112	0332	0552	1.0	8.0	6.5	60	- 24	+ 13	+ 15	1.27
100	T3	20	0113	0333	0553	2.0	12.0	8.5	40	- 28	+ 10.5	+ 12	1.13
100	T3	10	0114	0334	0554	2.0	12.0	8.5	40	- 28	+ 10.5	+ 12	1.13
100	T3	5	0115	0335	0555	2.0	12.0	8.5	40	- 28	+ 10.5	+ 12	1.13
150	T3	20	0116	0336	0556	2.0	18.0	11.5	35	- 48	+ 13	+ 15	1.02
150	T3	10	0117	0337	0557	2.0	18.0	11.5	35	- 48	+ 13	+ 15	1.02
150	T3	5	0118	0338	0558	2.0	18.0	11.5	35	- 48	+ 13	+ 15	1.02
300	T4	20	0119	0339	0559	8.0	32.0	15.5	25	- 60	+ 25	+ 25	0.69
300	T4	10	0120	0340	0560	8.0	32.0	15.5	25	- 60	+ 25	+ 25	0.69
50 WVDC at + 85 °C . . . 30 WVDC at + 125 °C													
5	T1	20	0121	0341	0561	1.0	2.0	1.5	400	- 16	+ 5	+ 6	3.98
5	T1	10	0122	0342	0562	1.0	2.0	1.5	400	- 16	+ 5	+ 6	3.98
5	T1	5	0123	0343	0563	1.0	2.0	1.5	400	- 16	+ 5	+ 6	3.98
10	T1	20	0124	0344	0564	1.0	2.0	2.0	250	- 24	+ 8	+ 9	2.66
10	T1	10	0125	0345	0565	1.0	2.0	2.0	250	- 24	+ 8	+ 9	2.66
10	T1	5	0126	0346	0566	1.0	2.0	2.0	250	- 24	+ 8	+ 9	2.66
25	T2	20	0127	0347	0567	1.0	5.0	4.0	95	- 20	+ 10.5	+ 12	2.13
25	T2	10	0128	0348	0568	1.0	5.0	4.0	95	- 20	+ 10.5	+ 12	2.13
25	T2	5	0129	0349	0569	1.0	5.0	4.0	95	- 20	+ 10.5	+ 12	2.13
47	T2	20	0130	0350	0570	1.0	9.0	5.0	70	- 28	+ 13	+ 15	1.56
47	T2	10	0131	0351	0571	1.0	9.0	5.0	70	- 28	+ 13	+ 15	1.56
47	T2	5	0132	0352	0572	1.0	9.0	5.0	70	- 28	+ 13	+ 15	1.56
60	T3	20	0133	0353	0573	2.0	12.0	6.0	45	- 16	+ 10.5	+ 12	1.33
60	T3	10	0134	0354	0574	2.0	12.0	6.0	45	- 16	+ 10.5	+ 12	1.33
60	T3	5	0135	0355	0575	2.0	12.0	6.0	45	- 16	+ 10.5	+ 12	1.33
82	T3	20	0136	0356	0576	2.0	16.0	7.5	45	- 32	+ 13	+ 15	1.22
82	T3	10	0137	0357	0577	2.0	16.0	7.5	45	- 32	+ 13	+ 15	1.22
82	T3	5	0138	0358	0578	2.0	16.0	7.5	45	- 32	+ 13	+ 15	1.22
160	T4	20	0139	0359	0579	6.0	32.0	8.5	27	- 50	+ 25	+ 25	0.71
160	T4	10	0140	0360	0580	6.0	32.0	8.5	27	- 50	+ 25	+ 25	0.71
60 WVDC at + 85 °C . . . 40 WVDC at + 125 °C													
4	T1	20	0141	0361	0581	1.0	2.0	1.4	550	- 16	+ 5	+ 6	4.65
4	T1	10	0142	0362	0582	1.0	2.0	1.4	550	- 16	+ 5	+ 6	4.65
4	T1	5	0143	0363	0583	1.0	2.0	1.4	550	- 16	+ 5	+ 6	4.65
8.2	T1	20	0144	0364	0584	1.0	2.0	2.0	275	- 24	+ 8	+ 9	3.24
8.2	T1	10	0145	0365	0585	1.0	2.0	2.0	275	- 24	+ 8	+ 9	3.24
8.2	T1	5	0146	0366	0586	1.0	2.0	2.0	275	- 24	+ 8	+ 9	3.24
20	T2	20	0147	0367	0587	1.0	5.0	3.5	105	- 16	+ 10.5	+ 12	2.32
20	T2	10	0148	0368	0588	1.0	5.0	3.5	105	- 16	+ 10.5	+ 12	2.32
20	T2	5	0149	0369	0589	1.0	5.0	3.5	105	- 16	+ 10.5	+ 12	2.32
39	T2	20	0150	0370	0590	1.0	9.0	5.0	90	- 28	+ 10.5	+ 12	1.70
39	T2	10	0151	0371	0591	1.0	9.0	5.0	90	- 28	+ 10.5	+ 12	1.70
39	T2	5	0152	0372	0592	1.0	9.0	5.0	90	- 28	+ 10.5	+ 12	1.70
50	T3	20	0153	0373	0593	2.0	12.0	5.0	50	- 16	+ 10.5	+ 12	1.33
50	T3	10	0154	0374	0594	2.0	12.0	5.0	50	- 16	+ 10.5	+ 12	1.33
50	T3	5	0155	0375	0595	2.0	12.0	5.0	50	- 16	+ 10.5	+ 12	1.33
68	T3	20	0156	0376	0596	2.0	16.0	6.5	50	- 32	+ 10.5	+ 12	1.27
68	T3	10	0157	0377	0597	2.0	16.0	6.5	50	- 32	+ 10.5	+ 12	1.27
68	T3	5	0158	0378	0598	2.0	16.0	6.5	50	- 32	+ 10.5	+ 12	1.27
140	T4	20	0159	0379	0599	8.0	32.0	8.0	28	- 40	+ 20	+ 20	0.76
140	T4	10	0160	0380	0600	8.0	32.0	8.0	28	- 40	+ 20	+ 20	0.76
75 WVDC at + 85 °C . . . 50 WVDC at + 125 °C													
3.5	T1	20	0161	0381	0601	1.0	2.0	1.25	650	- 16	+ 5	+ 6	4.74
3.5	T1	10	0162	0382	0602	1.0	2.0	1.25	650	- 16	+ 5	+ 6	4.74
3.5	T1	5	0163	0383	0603	1.0	2.0	1.25	650	- 16	+ 5	+ 6	4.74
6.8	T1	20	0164	0384	0604	1.0	2.0	1.75	300	- 20	+ 8	+ 9	3.42

Note

* Dash number will include the letter "H"to indicate the optional vibration and shock requirements (i.e., 51 g random vibration, 80 g sinusoidal vibration and 500 g shock).

Downloaded from Elcodis.com electronic components distributor

STANDARD/EXTENDED RATINGS: CLR90, M39006/30-XXXX

CAPACITANCE (µF)	CASE CODE	CAP. TOL. (± %)	PART NO. M39006/30-* FAILURE RATE LEVEL (%/1000 h)			MAX. DCL (µA) at		MAX. DF at + 25 °C (%)	MAX. IMP. at - 55 °C (Ω)	MAX. CAPACITANCE CHANGE (%) at			MAX. ESR at + 25 °C 120 Hz (Ω)
			M 1.0	P 0.1	R 0.01	+ 25 °C	+ 85 °C + 125 °C			- 55 °C	+ 85 °C	+ 125 °C	
75 WVDC at + 85 °C . . . 50 WVDC at + 125 °C													
6.8	T1	10	0165	0385	0605	1.0	2.0	1.75	300	- 20	+ 8	+ 9	3.42
6.8	T1	5	0166	0386	0606	1.0	2.0	1.75	300	- 20	+ 8	+ 9	3.42
15	T2	20	0167	0387	0607	1.0	5.0	3.0	150	- 16	+ 8	+ 9	2.66
15	T2	10	0168	0388	0608	1.0	5.0	3.0	150	- 16	+ 8	+ 9	2.66
15	T2	5	0169	0389	0609	1.0	5.0	3.0	150	- 16	+ 8	+ 9	2.66
33	T2	20	0170	0390	0610	1.0	10.0	5.0	90	- 24	+ 10.5	+ 15	2.01
33	T2	10	0171	0391	0611	1.0	10.0	5.0	90	- 24	+ 10.5	+ 15	2.01
33	T2	5	0172	0392	0612	1.0	10.0	5.0	90	- 24	+ 10.5	+ 15	2.01
40	T3	20	0173	0393	0613	2.0	12.0	4.5	60	- 16	+ 10.5	+ 12	1.50
40	T3	10	0174	0394	0614	2.0	12.0	4.5	60	- 16	+ 10.5	+ 12	1.50
40	T3	5	0175	0395	0615	2.0	12.0	4.5	60	- 16	+ 10.5	+ 12	1.50
56	T3	20	0176	0396	0616	2.0	17.0	5.5	60	- 28	+ 10.5	+ 15	1.31
56	T3	10	0177	0397	0617	2.0	17.0	5.5	60	- 28	+ 10.5	+ 15	1.31
56	T3	5	0178	0398	0618	2.0	17.0	5.5	60	- 28	+ 10.5	+ 15	1.31
110	T4	20	0179	0399	0619	9.0	36.0	6.0	29	- 35	+ 20	+ 20	0.73
110	T4	10	0180	0400	0620	9.0	36.0	6.0	29	- 35	+ 20	+ 20	0.73
100 WVDC at + 85 °C . . . 65 WVDC at + 125 °C													
2.5	T1	20	0181	0401	0621	1.0	2.0	1.0	950	- 16	+ 7	+ 8	5.31
2.5	T1	10	0182	0402	0622	1.0	2.0	1.0	950	- 16	+ 7	+ 8	5.31
2.5	T1	5	0183	0403	0623	1.0	2.0	1.0	950	- 16	+ 7	+ 8	5.31
4.7	T1	20	0184	0404	0624	1.0	2.0	1.5	500	- 16	+ 7	+ 8	4.24
4.7	T1	10	0185	0405	0625	1.0	2.0	1.5	500	-16	+ 7	+ 8	4.24
4.7	T1	5	0186	0406	0626	1.0	2.0	1.5	500	-16	+ 7	+ 8	4.24
11.0	T2	20	0187	0407	0627	1.0	4.0	2.5	200	-16	+ 8	+ 8	3.02
11.0	T2	10	0188	0408	0628	1.0	4.0	2.5	200	-16	+ 8	+ 8	3.02
11.0	T2	5	0189	0409	0629	1.0	4.0	2.5	200	-16	+ 8	+ 8	3.02
22.0	T2	20	0190	0410	0630	1.0	9.0	3.75	100	-16	+ 8	+ 8	2.26
22.0	T2	10	0191	0411	0631	1.0	9.0	3.75	100	-16	+ 8	+ 8	2.26
22.0	T2	5	0192	0412	0632	1.0	9.0	3.75	100	-16	+ 8	+ 8	2.26
30.0	T3	20	0193	0413	0633	2.0	12.0	3.5	80	-16	+ 8	+ 8	1.55
30.0	T3	10	0194	0414	0634	2.0	12.0	3.5	80	-16	+ 8	+ 8	1.55
30.0	T3	5	0195	0415	0635	2.0	12.0	3.5	80	-16	+ 8	+ 8	1.55
43.0	T3	20	0196	0416	0636	2.0	17.0	4.25	70	-20	+ 8	+ 8	1.31
43.0	T3	10	0197	0417	0637	2.0	17.0	4.25	70	-20	+ 8	+ 8	1.31
43.0	T3	5	0198	0418	0638	2.0	17.0	4.25	70	-20	+ 8	+ 8	1.31
86.0	T4	20	0199	0419	0639	9.0	36.0	5.0	30	-25	+ 15	+ 15	0.77
86.0	T4	10	0200	0420	0640	9.0	36.0	5.0	30	-25	+ 15	+ 15	0.77
125 WVDC at + 85 °C . . . 85 WVDC at + 125 °C													
1.7	T1	20	0201	0421	0641	1.0	2.0	1.0	1250	- 16	+ 7	+ 8	7.81
1.7	T1	10	0202	0422	0642	1.0	2.0	1.0	1250	- 16	+ 7	+ 8	7.81
1.7	T1	5	0203	0423	0643	1.0	2.0	1.0	1250	- 16	+ 7	+ 8	7.81
3.6	T1	20	0204	0424	0644	1.0	2.0	1.35	600	- 24	+ 7	+ 8	4.98
3.6	T1	10	0205	0425	0645	1.0	2.0	1.35	600	- 16	+ 7	+ 8	4.98
3.6	T1	5	0206	0426	0646	1.0	2.0	1.35	600	- 16	+ 7	+ 8	4.98
9.0	T2	20	0207	0427	0647	1.0	5.0	2.5	240	- 16	+ 7	+ 8	3.69
9.0	T2	10	0208	0428	0648	1.0	5.0	2.5	240	- 16	+ 7	+ 8	3.69
9.0	T2	5	0209	0429	0649	1.0	5.0	2.5	240	- 16	+ 7	+ 8	3.69
14.0	T2	20	0210	0430	0650	1.0	7.0	3.0	167	- 16	+ 7	+ 8	2.85
14.0	T2	10	0211	0431	0651	1.0	7.0	3.0	167	- 16	+ 7	+ 8	2.85
14.0	T2	5	0212	0432	0652	1.0	7.0	3.0	167	- 16	+ 7	+ 8	2.85
18.0	T3	20	0213	0433	0653	2.0	9.0	2.5	129	- 16	+ 7	+ 8	1.85
18.0	T3	10	0214	0434	0654	2.0	9.0	2.5	129	- 16	+ 7	+ 8	1.85
18.0	T3	5	0215	0435	0655	2.0	9.0	2.5	129	- 16	+ 7	+ 8	1.85
25.0	T3	20	0216	0436	0656	2.0	13.0	3.0	93	- 16	+ 7	+ 8	1.59
25.0	T3	10	0217	0437	0657	2.0	13.0	3.0	93	- 16	+ 7	+ 8	1.59
25.0	T3	5	0218	0438	0658	2.0	13.0	3.0	93	- 16	+ 7	+ 8	1.59
56.0	T4	20	0219	0439	0659	10.0	40.0	3.25	32	- 25	+ 15	+ 15	0.77
56.0	T4	10	0220	0440	0660	10.0	40.0	3.25	32	- 25	+ 15	+ 15	0.77

Note

* Dash number will include the letter "H"to indicate the optional vibration and shock requirements (i.e., 51 g random vibration, 80 g sinusoidal vibration and 500 g shock).

Downloaded from Elcodis.com electronic components distributor

STANDARD/EXTENDED RATINGS: CLR91, M39006/31-XXXX

CAPACITANCE (µF)	CASE CODE	CAP. TOL. (± %)	PART NO. M39006/31-* FAILURE RATE LEVEL (%/1000 h)			MAX. DCL (µA) at		MAX. DF at + 25 °C (%)	MAX. IMP. at - 55 °C (Ω)	MAX.. CAPACITANCE CHANGE (%) at			MAX. ESR at + 25 °C 120 Hz (Ω)
			M 1.0	P 0.1	R 0.01	+ 25 °C	+ 85 °C + 125 °C			- 55 °C	+ 85 °C	+ 125 °C	
6 WVDC at + 85 °C . . .4 WVDC at + 125 °C													
220	T1	20	0001	0089	0177	2	9	25	36	- 64	13	16	1.51
220	T1	10	0002	0090	0178	2	9	25	36	- 64	13	16	1.51
820	T2	20	0003	0091	0179	3	14	77.5	18	- 88	16	20	1.26
820	T2	10	0004	0092	0180	3	14	77.5	18	- 88	16	20	1.26
1500	T3	20	0005	0093	0181	5	20	86	18	- 90	20	25	0.76
1500	T3	10	0006	0094	0182	5	20	86	18	- 90	20	25	0.76
2200	T4	20	0007	0095	0183	6	24	85	13	- 90	25	30	0.52
2200	T4	10	0008	0096	0184	6	24	85	13	- 90	25	30	0.52
8 WVDC at + 85 °C . . . 5 WVDC at + 125 °C													
180	T1	20	0009	0097	0185	2	9	20.5	45	- 60	13	16	1.51
180	T1	10	0010	0098	0186	2	9	20.5	45	- 60	13	16	1.51
680	T2	20	0011	0099	0187	3	14	65	22	- 83	16	20	1.27
680	T2	10	0012	0100	0188	3	14	65	22	- 83	16	20	1.27
1500	T3	20	0013	0101	0189	5	20	85	18	- 90	20	25	0.75
1500	T3	10	0014	0102	0190	5	20	85	18	- 90	20	25	0.75
1800	T4	20	0015	0103	0191	7	25	69	14	- 90	25	30	0.51
1800	T4	10	0016	0104	0192	7	25	69	14	- 90	25	30	0.51
10 WVDC at + 85 °C . . . 7 WVDC at + 125 °C													
150	T1	20	0017	0105	0193	2	9	17	54	- 55	13	16	1.51
150	T1	10	0018	0106	0194	2	9	17	54	- 55	13	16	1.51
560	T2	20	0019	0107	0195	3	16	53	27	- 77	16	20	1.26
560	T2	10	0020	0108	0196	3	16	53	27	- 77	16	20	1.26
1200	T3	20	0021	0109	0197	5	20	68.5	18	- 88	20	25	0.76
1200	T3	10	0022	0110	0198	5	20	68.5	18	- 88	20	25	0.76
1500	T4	20	0023	0111	0199	7	25	57	15	- 88	25	30	0.51
1500	T4	10	0024	0112	0200	7	25	57	15	- 88	25	30	0.51
15 WVDC at + 85 °C . . . 10 WVDC at + 125 °C													
100	T1	20	0025	0113	0201	2	9	15	72	- 44	13	16	1.99
100	T1	10	0026	0114	0202	2	9	15	72	- 44	13	16	1.99
390	T2	20	0027	0115	0203	3	16	37	31	- 66	16	20	1.26
390	T2	10	0028	0116	0204	3	16	37	31	- 66	16	20	1.26
820	T3	20	0029	0117	0205	6	24	55.5	22	- 77	20	25	0.9
820	T3	10	0030	0118	0206	6	24	55.5	22	- 77	20	25	0.9
1000	T4	20	0031	0119	0207	8	32	46	17	- 77	25	30	0.61
1000	T4	10	0032	0120	0208	8	32	46	17	- 77	25	30	0.61
25 WVDC at + 85 °C . . . 15 WVDC at + 125 °C													
68	T1	20	0033	0121	0209	2	9	11	90	- 40	12	15	2.15
68	T1	10	0034	0122	0210	2	9	11	90	- 40	12	15	2.15
270	T2	20	0035	0123	0211	3	16	27.5	33	- 62	13	16	1.35
270	T2	10	0036	0124	0212	3	16	27.5	33	- 62	13	16	1.35
560	T3	20	0037	0125	0213	7	28	38	24	- 72	20	25	0.9
560	T3	10	0038	0126	0214	7	28	38	24	- 72	20	25	0.9
680	T4	20	0039	0127	0215	8	32	31.5	19	- 72	25	30	0.62
680	T4	10	0040	0128	0216	8	32	31.5	19	- 72	25	30	0.62
30 WVDC at + 85 °C . . . 20 WVDC at + 125 °C													
56	T1	20	0041	0129	0217	2	9	11	100	- 38	12	15	2.61
56	T1	10	0042	0130	0218	2	9	11	100	- 38	12	15	2.61
220	T2	20	0043	0131	0219	3	16	21	36	- 60	13	16	1.27
220	T2	10	0044	0132	0220	3	16	21	36	- 60	13	16	1.27
470	T3	20	0045	0133	0221	8	32	32	25	- 65	20	25	0.91
470	T3	10	0046	0134	0222	8	32	32	25	- 65	20	25	0.91
560	T4	20	0047	0135	0223	9	36	27.5	20	- 65	25	30	0.65
560	T4	10	0048	0136	0224	9	36	27.5	20	- 65	25	30	0.65

Note

* Dash number will include the letter "H"to indicate the optional vibration and shock requirements (i.e., 51 g random vibration, 80 g sinusoidal vibration and 500 g shock).

Downloaded from Elcodis.com electronic components distributor

STANDARD/EXTENDED RATINGS: CLR91, M39006/31-XXXX

CAPACITANCE (µF)	CASE CODE	CAP. TOL. (± %)	PART NO. M39006/31-* FAILURE RATE LEVEL (%/1000 h)			MAX. DCL (µA) at		MAX. DF at + 25 °C (%)	MAX. IMP. at - 55 °C (Ω)	MAX. CAPACITANCE CHANGE (%) at			MAX. ESR at + 25 °C 120 Hz (Ω)
			M 1.0	P 0.1	R 0.01	+ 25 °C	+ 85 °C + 125 °C			- 55 °C	+ 85 °C	+ 125 °C	
50 WVDC at + 85 °C . . . 30 WVDC at + 125 °C													
33	T1	20	0049	0137	0225	2	9	6.15	135	- 29	10	12	2.48
33	T1	10	0050	0138	0226	2	9	6.15	135	- 29	10	12	2.48
120	T2	20	0051	0139	0227	4	24	11.3	49	- 42	12	15	1.25
120	T2	10	0052	0140	0228	4	24	11.3	49	- 42	12	15	1.25
270	T3	20	0053	0141	0229	8	32	18.5	29	- 46	20	25	0.91
270	T3	10	0054	0142	0230	8	32	18.5	29	- 46	20	25	0.91
330	T4	20	0055	0143	0231	9	36	19	22	- 46	25	30	0.77
330	T4	10	0056	0144	0232	9	36	19	22	- 46	25	30	0.77
60 WVDC at + 85 °C . . . 40 WVDC at + 125 °C													
27	T1	20	0057	0145	0233	3	12	5.1	144	- 24	10	12	2.51
27	T1	10	0058	0146	0234	3	12	5.1	144	- 24	10	12	2.51
100	T2	20	0059	0147	0235	4	20	9.5	54	- 36	12	15	1.26
100	T2	10	0060	0148	0236	4	20	9.5	54	- 36	12	15	1.26
220	T3	20	0061	0149	0237	8	32	15	29	- 40	16	20	0.91
220	T3	10	0062	0150	0238	8	32	15	29	- 40	16	20	0.91
270	T4	20	0063	0151	0239	9	36	13.5	23	- 45	20	25	0.67
270	T4	10	0064	0152	0240	9	36	13.5	23	- 45	20	25	0.67
75 WVDC at + 85 °C . . . 50 WVDC at + 125 °C													
22	T1	20	0065	0153	0241	3	12	4.25	157	- 19	10	12	2.57
22	T1	10	0066	0154	0242	3	12	4.25	157	- 19	10	12	2.57
82	T2	20	0067	0155	0243	4	24	7.6	63	- 30	12	15	1.23
82	T2	10	0068	0156	0244	4	24	7.6	63	- 30	12	15	1.23
180	T3	20	0069	0157	0245	9	36	12.2	30	- 35	16	20	0.9
180	T3	10	0070	0158	0246	9	36	12.2	30	- 35	16	20	0.9
220	T4	20	0071	0159	0247	10	40	18.5	24	- 40	20	25	1.12
220	T4	10	0072	0160	0248	10	40	18.5	24	- 40	20	25	1.12
100 WVDC at + 85 °C . . . 65 WVDC at + 125 °C													
10	T1	20	0073	0161	0249	3	12	2.25	200	- 17	10	12	2.99
10	T1	10	0074	0162	0250	3	12	2.25	200	- 17	10	12	2.99
39	T2	20	0075	0163	0251	5	24	5.2	80	- 20	12	15	1.77
39	T2	10	0076	0164	0252	5	24	5.2	80	- 20	12	15	1.77
68	T3	20	0077	0165	0253	10	40	5.65	40	- 30	14	16	1.11
68	T3	10	0078	0166	0254	10	40	5.65	40	- 30	14	16	1.11
120	T4	20	0079	0167	0255	12	48	12.5	30	- 35	15	17	1.38
120	T4	10	0080	0168	0256	12	48	12.5	30	- 35	15	17	1.38
125 WVDC at + 85 °C . . . 85 WVDC at + 125 °C													
6.8	T1	20	0081	0169	0257	3	12	3	300	- 14	10	12	5.86
6.8	T1	10	0082	0170	0258	3	12	3	300	- 14	10	12	5.86
27	T2	20	0083	0171	0259	5	24	3.6	90	- 18	12	15	1.77
27	T2	10	0084	0172	0260	5	24	3.6	90	- 18	12	15	1.77
47	T3	20	0085	0173	0261	10	40	3.95	50	- 26	14	16	1.12
47	T3	10	0086	0174	0262	10	40	3.95	50	- 26	14	16	1.12
82	T4	20	0087	0175	0263	12	48	8.7	32	- 30	15	17	1.41
82	T4	10	0088	0176	0264	12	48	8.7	32	- 30	15	17	1.41

Note

* Dash number will include the letter “H”to indicate the optional vibration and shock requirements (i.e., 51 g random vibration, 80 g sinusoidal vibration and 500 g shock).

Downloaded from Elcodis.com electronic components distributor

Disclaimer

All product specifications and data are subject to change without notice.

Vishay Intertechnology, Inc., its affiliates, agents, and employees, and all persons acting on its or their behalf (collectively, “Vishay”), disclaim any and all liability for any errors, inaccuracies or incompleteness contained herein or in any other disclosure relating to any product.

Vishay disclaims any and all liability arising out of the use or application of any product described herein or of any information provided herein to the maximum extent permitted by law. The product specifications do not expand or otherwise modify Vishay’s terms and conditions of purchase, including but not limited to the warranty expressed therein, which apply to these products.

No license, express or implied, by estoppel or otherwise, to any intellectual property rights is granted by this document or by any conduct of Vishay.

The products shown herein are not designed for use in medical, life-saving, or life-sustaining applications unless otherwise expressly indicated. Customers using or selling Vishay products not expressly indicated for use in such applications do so entirely at their own risk and agree to fully indemnify Vishay for any damages arising or resulting from such use or sale. Please contact authorized Vishay personnel to obtain written terms and conditions regarding products designed for such applications.

Product names and markings noted herein may be trademarks of their respective owners.

Downloaded from Elcodis.com electronic components distributor