UNCONTROLLED DOCUMENT

| PART NUMBER | REV. |
|---|---|
| SSI–LXR4915SID–300 | |

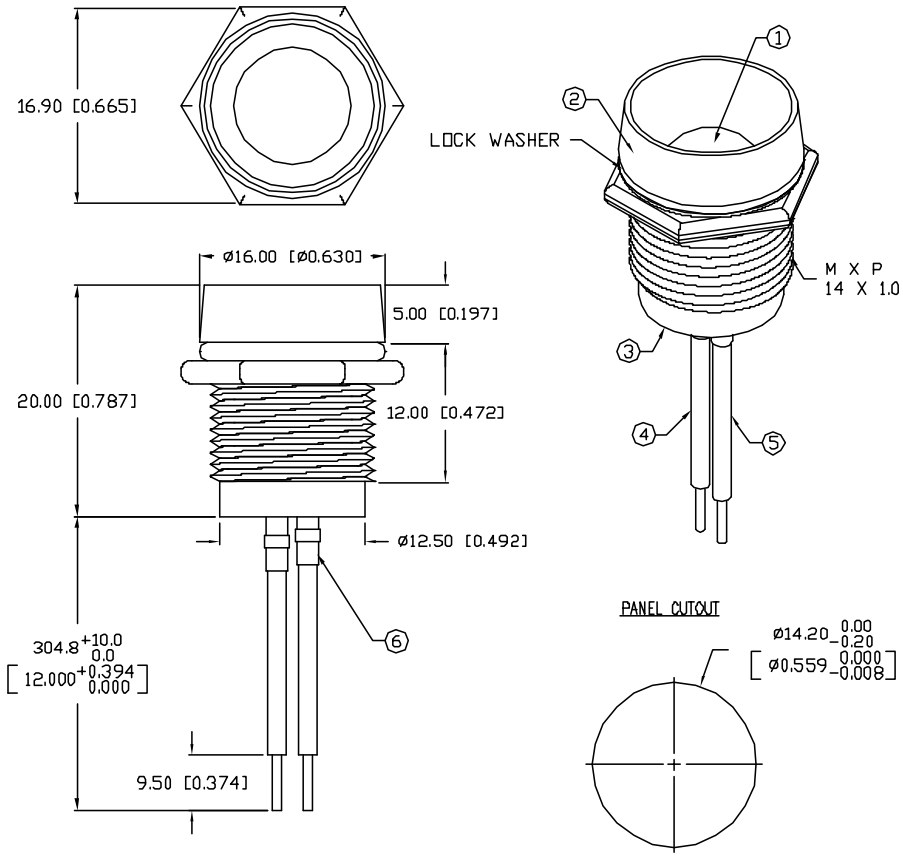


ELECTRO–OPTICAL CHARACTERISTICS $T_A$=25°C $I_f$=20mA

| PARAMETER | MIN | TYP | MAX | UNITS | TEST COND |
|---|---|---|---|---|---|
| PEAK WAVELENGTH | | 636 | | nm | |
| FORWARD VOLTAGE | | 2.0 | 2.5 | $V_f$ | |
| REVERSE VOLTAGE | 5.0 | | | $V_r$ | $I_r$=100µA |
| AXIAL INTENSITY | | 550 | | mcd | $I_f$=20mA |
| VIEWING ANGLE | | 60 | | 2x theta | |
| EMITTED COLOR: | RED | | | | |
| EPOXY LENS FINISH: | RED DIFFUSED | | | | |

LIMITS OF SAFE OPERATION AT 25°C

| PARAMETER | MAX | UNITS |
|---|---|---|
| PEAK FORWARD CURRENT* | 150 | mA |
| STEADY CURRENT | 30 | mA |
| POWER DISSIPATION | 105 | mW |
| DERATE FROM 25°C | −1.2 | mW/°C |
| OPERATING, STORAGE TEMP. | −40 TO +85 | °C |

* t<10µS

NOTES:

1. SSL–LX100133SID, RED LED UNCUT LEADS.
2. SSI–LXR4915, CHROME HOUSING.
3. NEOPRENE RUBBER BUSHING.
4. ANODE LEAD: LXP–WST24RDTOC, 24 AWG STRANDED, RED INSULATION, CUT 290mm LONG, STRIP 3mm & 9.5mm.
5. CATHODE LEAD: LXP–WST24BLTOC, 24 AWG STRANDED, BLACK INSULATION, CUT 290mm, STRIP 3mm & 9.5mm.
6. LXP–HEATSHRINK–2; 1/16" X 37mm (2 PCS.)
7. LED IS SECURED INSIDE HOLDER WITH UV GLUE. THEN, INSERT BUSHING.

UNCONTROLLED DOCUMENT

*UNLESS OTHERWISE SPECIFIED TOLERANCES PER DECIMAL PRECISION ARE: X=±1 (±0.039), X.X=±0.5 (±0.020), X.XX=±0.25 (±0.010), X.XXX=±0.127 (±0.005). LEAD SIZE=±0.05 (±0.002), LEAD LENGTH=±0.75 (±0.030). MIN= +DECIMAL PRECISION −0.00 MAX.= +0.00 −DECIMAL PRECISION

| REV. | PART NUMBER |
|---|---|
| | SSI–LXR4915SID–300 |

10mm, 636nm AlInGaP RED LED PANEL INDICATOR, RED DIFFUSED LENS, 12" WIRE LEADS.


CONFIDENTIAL INFORMATION
THE INFORMATION CONTAINED IN THIS DOCUMENT IS THE PROPERTY OF LUMEX INC. EXCEPT AS SPECIFICALLY AUTHORIZED IN WRITING BY LUMEX INC., THE HOLDER OF THIS DOCUMENT SHALL KEEP ALL INFORMATION CONTAINED HEREIN CONFIDENTIAL AND SHALL PROTECT SAME IN WHOLE OR IN PART FROM DISCLOSURE AND DISSEMINATION TO ALL THIRD PARTIES.


RELIABILITY NOTE
OUR MANY YEARS OF EXPERIENCE DATA ACCUMULATION INDICATE THAT SOLDER HEAT IS A MAJOR CAUSE OF EARLY AND FUTURE FAILURE. PLEASE PAY ATTENTION TO YOUR SOLDERING PROCESS.


LUMEX
290 E. HELEN ROAD
PALATINE, IL 60067–6976
PHONE: +1.847.359.2790
US WEB: www.lumex.com
TW WEB: www.lumex.com.tw


| DRAWN BY: | CHECKED BY: | APPROVED BY: | DATE: 9.8.06 |
|---|---|---|---|
| JD | | | PAGE: 1 OF 1 |
| | | | SCALE: N/A |

Downloaded from Elcodis.com electronic components distributor