THIS DRAWING IS UNPUBLISHED. RELEASED FOR PUBLICATION -.-- -
© COPYRIGHT - BY TYCO ELECTRONICS CORPORATION. ALL RIGHTS RESERVED.

LOC	DIST
FT	0

REVISIONS

P	LTR	DESCRIPTION	DATE	DRN	APVD
	J	REVISED PER ECO-07-004106	2/21/07	SS	DC

1. DESIGNED FOR .062±.0075 THICK PRINTED CIRCUIT BOARD.
2. DESIGNED TO CONFORM TO UL 250V COMMERCIAL SPACINGS.
3. PRINTED CIRCUIT BOARD EDGE CONFIGURATION PER CP78-36020.

4. MUST BE PURCHASED SEPERATELY.
5. TIN-LEAD PLATE .000100 MIN THK OVER NICKEL UNDERPLATE .000050 MIN THK.
6. GOLD PLATE .000030 MIN THK OVER NICKEL UNDERPLATE .000050 MIN THICK.
7. TIN PLATE .000100 MIN THK OVER NICKEL UNDERPLATE .000050 MIN THK.

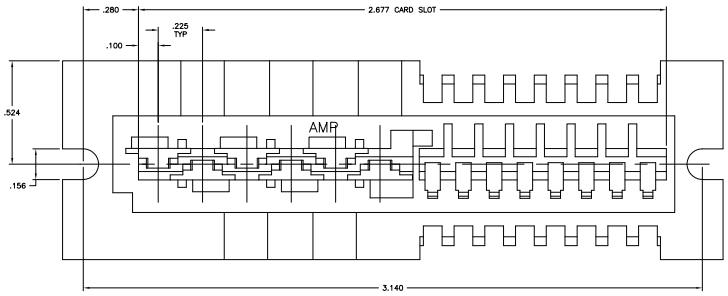

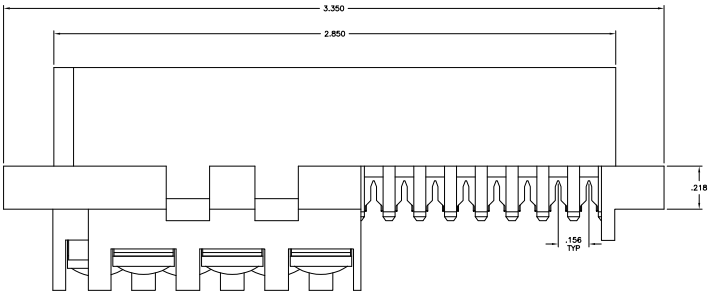

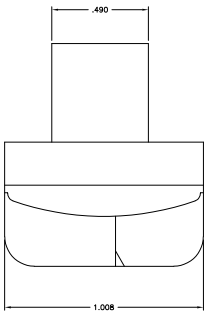

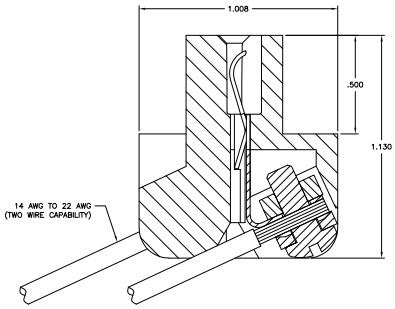

MULTIPLE TAP SECTION

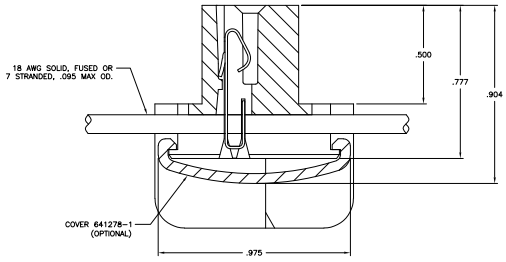

MTA SECTION

	1	1-641277-1
OBSOLETE	6	641277-2
	5	641277-1
FINISH		PART NUMBER

THIS DRAWING IS A CONTROLLED DOCUMENT.

DIMENSIONS: INCHES

TOLERANCE UNLESS OTHERWISE SPECIFIED: 6 PLC ± - ; 3 PLC ± - ; 2 PLC ± - ; 1 PLC ± - ; 4 PLC ± - ; ANGLES ± -

MATERIAL -

FINISH -

DR S. SCHLEGEL 4/4/06
CHK D. COURS 4/4/06
APVD D. COURS 4/4/06
PRODUCT SPEC —
APPLICATION SPEC —
WEIGHT —

Tyco Electronics Corporation
Harrisburg, PA 17105-3608

NAME MULTIPLE-TAP/MTA ASSY
—
—

SIZE A1 CAGE CODE 00779 DRAWING NO C-641277 RESTRICTED TO —

CUSTOMER DRAWING SCALE 4:1 SHEET 1 OF 1 REV J

AMP 4805 REV 31MMR2000

Downloaded from Elcodis.com electronic components distributor