	COUNT	DESCRIPTION OF REVISIONS	BY	CHKD	DATE		COUNT	DESCRIPTION OF REVISIONS	BY	CHKD	DATE
△						△					
△						△					

APPLICABLE STANDARD				
RATING	OPERATING TEMPERATURE RANGE	-35 °C TO +85 °C(NOTE1)	STORAGE TEMPERATURE RANGE	-10 °C TO +60 °C
	VOLTAGE	150 V AC	APPLICABLE CONTACT	—
	CURRENT	1 A	APPLICABLE CONNECTOR	DF13/13A-20DP-1.25V(01)
			APPLICABLE CABLE	—

SPECIFICATIONS

ITEM	TEST METHOD	REQUIREMENTS	QT	AT
CONSTRUCTION				
GENERAL EXAMINATION	VISUALLY AND BY MEASURING INSTRUMENT.	ACCORDING TO DRAWING.	○	○
MARKING	CONFIRMED VISUALLY		○	○
ELECTRICAL CHARACTERISTICS				
CONTACT RESISTANCE	100 mA (DC OR 1000 Hz).	30 mΩ MAX.	○	
CONTACT RESISTANCE MILLIVOLT LEVEL METHOD	20 mV MAX. mA(DC OR 1000 Hz).		-	-
INSULATION RESISTANCE	100 V DC.	500 MΩ MIN.	○	-
VOLTAGE PROOF	500 V AC FOR 1 min.	NO FLASHOVER OR BREAKDOWN.	○	-
MECHANICAL CHARACTERISTICS				
CONTACT INSERTION AND EXTRACTION FORCES	BY STEEL GAUGE.	INSERTION FORCE — N MAX. EXTRACTION FORCE — N MIN.	-	-
INSERTION AND WITHDRAWAL FORCES	MEASURED BY APPLICABLE CONNECTOR.	INSERTION FORCE N MAX. EXTRACTION FORCE N MIN.	-	-
MECHANICAL OPERATION	50 TIMES INSERTIONS AND EXTRACTION.	① CONTACT RESISTANCE: 30 mΩ MAX. ② NO DAMAGE, CRACK OR LOOSENESS OF PARTS.	○	-
VIBRATION	FREQUENCY 10 TO 55 Hz, SINGLE AMPLITUDE 0.75 mm, - m/s² AT 2 h, 3 DIRECTIONS.	① NO ELECTRICAL DISCONTINUITY OF 1 μs.	○	-
SHOCK	490 m/s² DURATION OF PULSE 11 ms AT 3 TIMES FOR 3 DIRECTIONS.	② CONTACT RESISTANCE: 30 mΩ MAX. ③ NO DAMAGE, CRACK OR LOOSENESS OF PARTS.	○	
ENVIRONMENTAL CHARACTERISTICS				
RAPID CHANGE OF TEMPERATURE	TEMPERATURE -55 → +15~35 → +85 → 15~35 °C TIME 30 → 2~3 → 30 → 2 ~3min UNDER 5 CYCLES.	① CONTACT RESISTANCE: 30 mΩ MAX. ②INSULATION RESISTANCE: 500 MΩ MIN. ③ NO DAMAGE, CRACK OR LOOSENESS OF PARTS.	○	-
DAMP HEAT (STEADY STATE)	EXPOSED AT 40 ± 2 °C, 90 ~ 95 %, 96 h.		○	-
CORROSION, SALT MIST	EXPOSED IN 5 % SALT WATER SPRAY FOR 48 h.	①CONTACT RESISTANCE - mΩ MAX. ② NO HEAVY CORROSION.	○	-
HYDROGEN SULPHIDE	EXPOSED IN - PPM FOR - h. (TEST STANDARD: JEIDA-38)	①CONTACT RESISTANCE mΩ MAX. ② NO HEAVY CORROSION.	-	
SULPHUR DIOXIDE	EXPOSED IN 10 PPM FOR 96 h. (TEST STANDARD: JEIDA-39)	①CONTACT RESISTANCE - mΩ MAX. ② NO HEAVY CORROSION.	○	
RESISTANCE TO SOLDERING HEAT	SOLDER TEMPERATURE, 260 ± 5 °C FOR IMMERSION, DURATION, 5 s.	NO DEFORMATION OF CASE OF EXCESSIVE LOOSENESS OF THE TERMINALS.	○	-
SOLDERABILITY	SOLDERED AT SOLDER TEMPERATURE, 230 ± 10 °C FOR IMMERSION DURATION, 3s.	SOLDER SHALL COVER A MINIMUM OF 95 % OF THE SURFACE BEING IMMERSED.	○	

REMARKS
NOTE 1. INCLUDE THE TEMPERATURE RISING BY CURRENT.
FOR REFERENCE ONLY
Subject to change without notice
Unless otherwise specified, refer to MIL-STD-1344.

DRAWN	DESIGNED	CHECKED	APPROVED	RELEASED
F. Asai '98.6.23	F. Asai '98.6.23	K. Akiyama '98.6.23	K. Katayose '98.6.23	HRS USA 5 5 '98

TO

Note QT:Qualification Test AT Assurance Test ○:Applicable Test

HRS HIROSE ELECTRIC CO., LTD.	SPECIFICATION SHEET	PART NO. DF13-20DS-1.25DSA(01)	
CODE NO (OLD) CL	DRAWING NO ELC4-160785-01	PART NO CL 536 - 0625 - 0 - 01	1 / 1

FORM No. 231-1

Downloaded from Elcodis.com electronic components distributor

Downloaded from Elcodis.com electronic components distributor

COUNT	DESCRIPTION OF REVISIONS	BY	CHKD	DATE	COUNT	DESCRIPTION OF REVISIONS	BY	CHKD	DATE
△					△				
△					△				
△					△				

FOR REFERENCE ONLY
Subject to change without notice

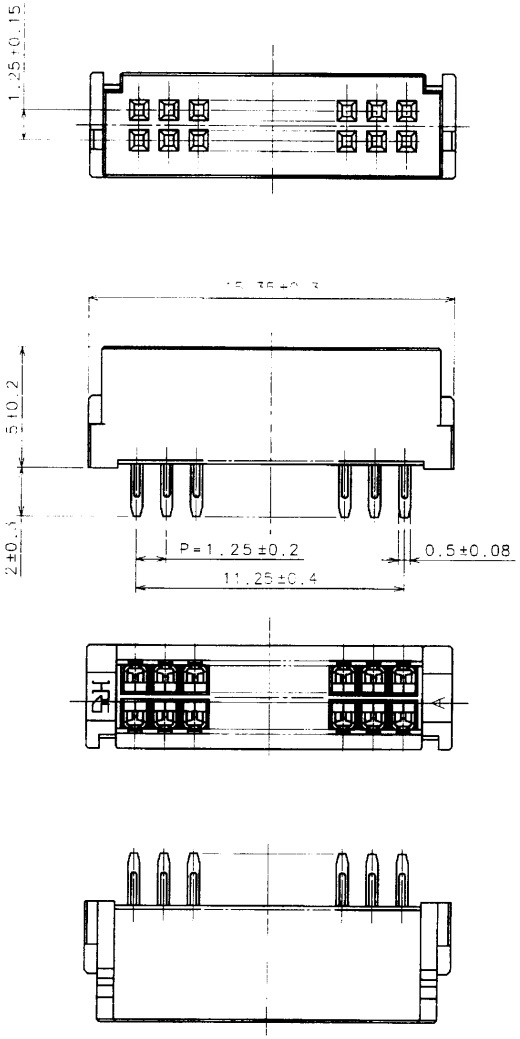

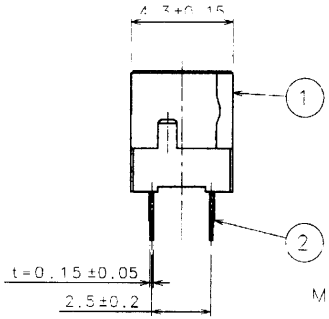

MATED CONNECTORS

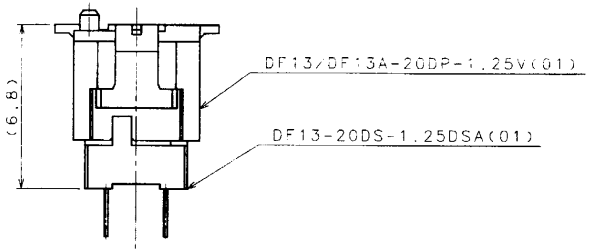

NOTE1: THROUGH HOLE DIA. ON BOARD: $\phi 0.6^{+0.05}_{0}$

NO	MATERIAL	FINISH, REMARKS
1	POLYAMIDE	BEIGE(NATURAL),UL94V-0
2	PHOSPHOR BRONZE	CONTACT AREA:GOLD PLATED SOLDERING AREA:TIN PLATED

CODE NO.(OLD)	DRAWN	DESIGNED	CHECKED	APPROVED	RECEIVED
	S.H. '98.6.1	'98.6.1	'98.6.12	'98.6.15	HRS USA '98.5.04

SCALE 5 : 1	DRAWING NO. EDC3-160785-01	PART NO. DF13-20DS-1.25DSA(01)
UNITS mm	HRS H.ROSE ELECTRIC CO.,LTD.	CODE NO. CL536-0625-0-01 1/1

FORM NO.229

TO

Downloaded from Elcodis.com electronic components distributor

COUNT	DESCRIPTION OF REVISIONS	BY	CHKD	DATE	COUNT	DESCRIPTION OF REVISIONS	BY	CHKD	DATE
△					△				
△					△				
△					△				

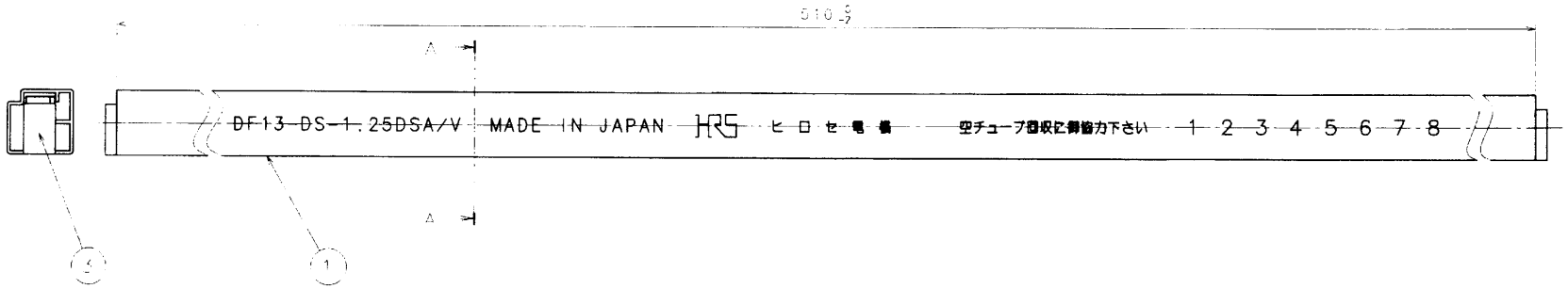

A (10 : 1)

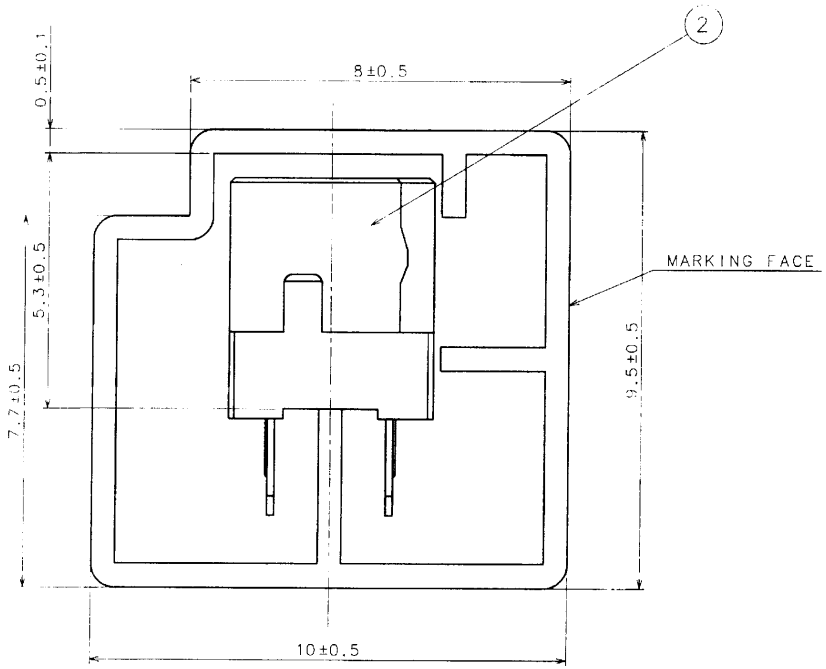

NOTES 1: NUMBER OF CONNECTORS PER TUBE SHALL BE 31.
2: THESE CONNECTORS SHALL BE ON SALED IN ACCORDANCE WITH THE MULTIPLE QUANTITY OF 31.

FOR REFERENCE ONLY
Subject to change without notice

NO	MATERIAL	FINISH, REMARKS	NO	MATERIAL	FINISH, REMARKS
2	DF13-20DS-1.25DSA(01)				
1	POLYSTYRENE	ELECTROSTATIC PROTECTION(PURPLE)	3	SBR	STOPPER:GREEN)

CODE NO.(OLD)	DRAWN	DESIGNED	CHECKED	APPROVED	APPLICATION
	S. Hao		Y. Akiyama '98. 6.12	K. Katayose '98. 6.15	HRS USA 5.5.14

SCALE 5 : 1	DRAWING NO. EDC3-160785-02	PART NO. DF13-20DS-1.25DSA(50)
UNITS mm	HRS HIROSE ELECTRIC CO., LTD.	CODE NO. CL536-0625-0-50 1/1

FORM NO. 229