THIS DRAWING IS UNPUBLISHED. RELEASED FOR PUBLICATION: - -
© COPYRIGHT - BY TYCO ELECTRONICS CORPORATION. ALL RIGHTS RESERVED.

LOC	DIST
AD	0

REVISIONS

Y	LTR	DESCRIPTION	DATE	DRN	APVD
	AB	REV PER 0G3C-0198-99	23AUG00	BH	HW

1. RECEPTACLE ACCEPTS A .008–.014 THICK I.C. LEAD.
2. TUBE LOADED FOR AUTOMATIC INSERTION.
3. TWO .000030 MIN THK. GOLD STRIPES IN CONTACT AREA WITH TIN–LEAD (93/7) ON CONTACT LEGS, BALANCE OF CONTACT NICKEL PLATED.
4. TWO .000015 MIN THK. GOLD STRIPES IN CONTACT AREA WITH TIN–LEAD (93/7) ON CONTACT LEGS, BALANCE OF CONTACT NICKEL PLATED.
5. MAXIMUM DIMENSION FOR I.C. SEATING PLANE.

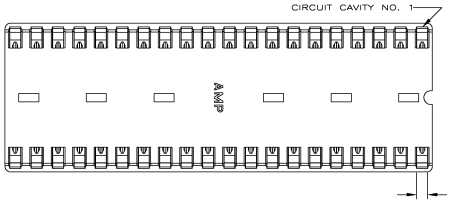

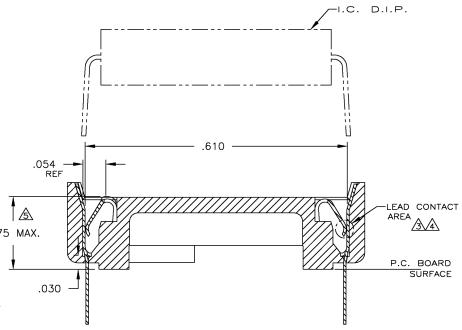

SECTION A–A
SCALE 10:1

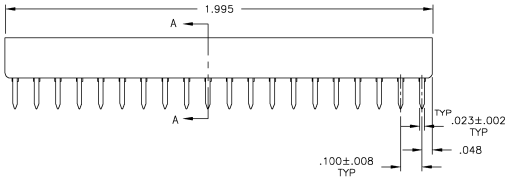

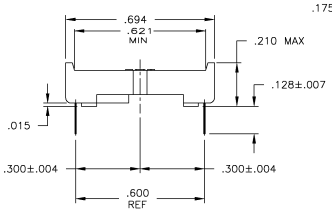

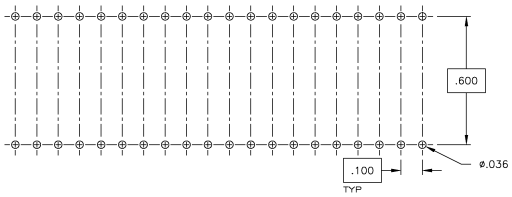

RECOMMENDED MOUNTING HOLE PATTERN
SCALE 4:1

	3	PHOS.BRZ. .006 THK	GLASS–FILLED THERMOPLASTIC, 94V–0, BLACK	2–640379–4
SUPSD BY 390262–5	TINNED	PHOS.BRZ. .005 THK	GLASS–FILLED THERMOPLASTIC, 94V–0, BLACK	2–640379–3
	3	BE.CU. .006 THK	GLASS–FILLED THERMOPLASTIC, 94V–0, BLACK	2–640379–2
SUPSD BY 390262–5	TINNED	BE.CU. .006 THK	GLASS–FILLED THERMOPLASTIC, 94V–0, BLACK	2–640379–1
	CONTACT FINISH	CONTACT MAT'L	HOUSING MATERIAL	PART NO.

THIS DRAWING IS A CONTROLLED DOCUMENT.

DRN M.CITRUS 28 FEB 97
CHK R.MILLER 28 FEB 97
APVD J.LAMBERT 28 FEB 97
PRODUCT SPEC 108–1066
APPLICATION SPEC 114–1049
WEIGHT –

AMP Tyco Electronics Corporation Harrisburg, PA 17105

NAME SOCKET ASSY, DIP, 40 POS, DIPLOMATE DL

SIZE A1 CAGE CODE 00779 DRAWING NO C–640379 RESTRICTED TO –

CUSTOMER DRAWING SCALE 4:1 SHEET 1 OF 1 REV AB

DIMENSIONS: INCHES
TOLERANCE UNLESS SPECIFIED: D PLC ± –; 2 PLC ± –; 3 PLC ± .005; 4 PLC ± .005; ANGLES ± –
MATERIAL SEE TABLE
FINISH SEE TABLE

AMP 4805 REV 31MAR2000

23AUG00

Downloaded from Elcodis.com electronic components distributor