THIS DRAWING IS UNPUBLISHED. RELEASED FOR PUBLICATION -.-- -.-
© COPYRIGHT - By - ALL RIGHTS RESERVED

UOC	DIST
AD	0

REVISIONS

P	LTR	DESCRIPTION	DATE	DWN	APVD
	AA1	REVISED PER ECO-11-004917	11MAR11	RK	HMR

1. RECEPTACLE ACCEPTS A .008–.014 THICK I.C. LEAD.
2. TUBE LOADED FOR AUTOMATIC INSERTION.
3. TWO .000030 MIN THK. GOLD STRIPES IN CONTACT AREA WITH TIN–LEAD (93/7) ON SOLDER LEGS, BALANCE OF CONTACT NICKEL PLATED.
4. TWO .000015 MIN THK. GOLD STRIPES IN CONTACT AREA WITH TIN–LEAD (93/7) ON SOLDER LEGS, BALANCE OF CONTACT NICKEL PLATED.
5. SEE RESTRICTED CUSTOMER DRAWING 3–641605–1, FOR PART NUMBERS 3–641605–1, & 3–641605–3.
6. SEE RESTRICTED CUSTOMER DRAWING 4–641605–3.

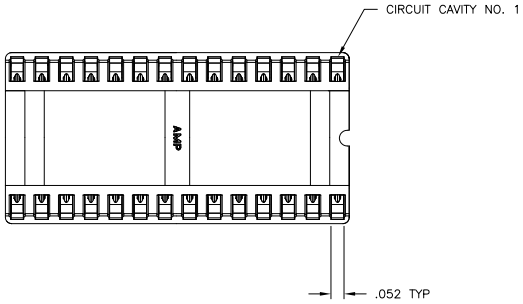

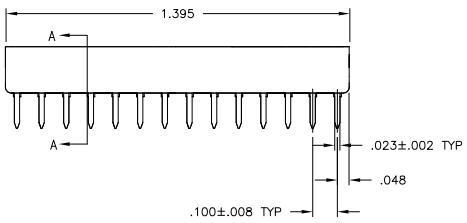

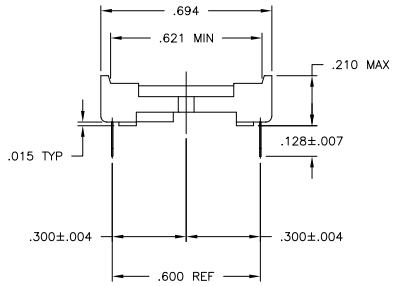

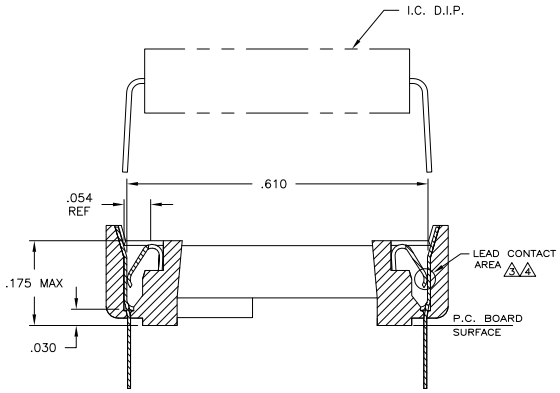

SECTION A–A
SCALE 10:1

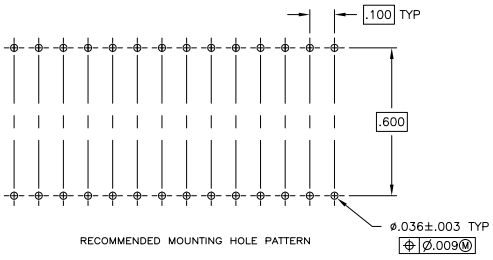

RECOMMENDED MOUNTING HOLE PATTERN

OBSOLETE				6
				5
				4
OBSOLETE	TINNED	PHOS.BRZ. .006 THK	GLASS–FILLED THERMOPLASTIC, 94V–O, BLACK	2–641605–5
	3	PHOS.BRZ. .006 THK	GLASS–FILLED THERMOPLASTIC, 94V–O, BLACK	2–641605–4
SUPSD BY 390262–2	TINNED	PHOS.BRZ. .006 THK	GLASS–FILLED THERMOPLASTIC, 94V–O, BLACK	2–641605–3
	3	BE.CU. .006 THK	GLASS–FILLED THERMOPLASTIC, 94V–O, BLACK	2–641605–2
SUPSD BY 390262–2	TINNED	BE.CU. .006 THK	GLASS–FILLED THERMOPLASTIC, 94V–O, BLACK	2–641605–1
	CONTACT FINISH	CONTACT MAT'L	HOUSING MATERIAL	PART NO.

THIS DRAWING IS A CONTROLLED DOCUMENT.

DIMENSIONS: INCHES

TOLERANCE UNLESS OTHERWISE SPECIFIED: 0 PLC ± – ; 1 PLC ± – ; 2 PLC ± – ; 3 PLC ± .005 ; 4 PLC ± – ; ANGLES ± 0°–30'

MATERIAL: SEE TABLE

FINISH: SEE TABLE

DR: R. BROWN 19OCT00
CK: H. WYNKOOP 19OCT00
APVD: H. WYNKOOP 19OCT00
PRODUCT SPEC: 108–1066
APPLICATION SPEC: 114–1049
WEIGHT: –

TE Connectivity

NAME: SOCKET ASSY, DIP, LADDER, 28 POS, DIPLOMATE™ DL

SIZE	CAGE CODE	DRAWING NO	RESTRICTED TO
A1	00779	C–641605	–

CUSTOMER DRAWING | SCALE 5:1 | SHEET 1 OF 1 | REV AA1

4MOS (3/11)

Downloaded from Elcodis.com electronic components distributor