THIS DRAWING IS UNPUBLISHED. RELEASED FOR PUBLICATION .19 .
© COPYRIGHT 19 BY AMP INCORPORATED. ALL RIGHTS RESERVED.

LOC	DIST
AC	0

REVISIONS

Y	LTR	DESCRIPTION	DATE	DWN	APVD
	AE	REV PER 063C-0104-01	25SEP01	RB	JO

1. RECEPTACLE ACCEPTS A .008-.014 THICK I.C. LEAD.
2. TUBE LOADED FOR AUTOMATIC INSERTION.
3. TWO .000030 MIN THK. GOLD STRIPES IN CONTACT AREA WITH TIN-LEAD (93/7) ON CONTACT LEGS, BALANCE OF CONTACT NICKEL PLATED.
4. TWO .000015 MIN THK. GOLD STRIPES IN CONTACT AREA WITH TIN-LEAD (93/7) ON CONTACT LEGS, BALANCE OF CONTACT NICKEL PLATED.
5. SEE RESTRICTED CUSTOMER DRAWING 3-641600-1.

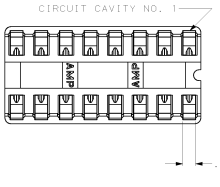

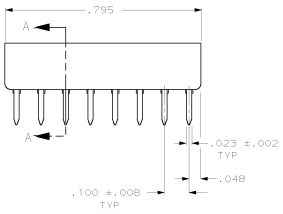

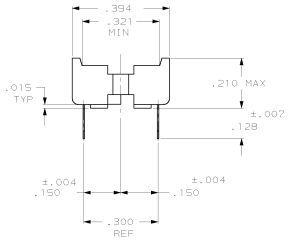

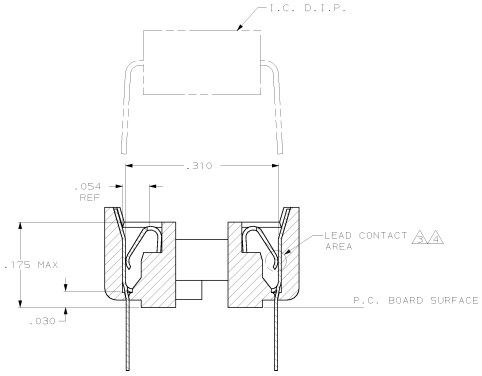

SECTION A—A
SCALE 10:1

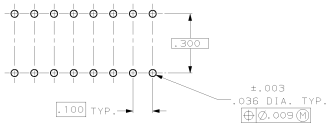

RECOMMENDED MOUNTING HOLE PATTERN
SCALE 4:1

				5
OBSOLETE	TINNED	PHOS.BRZ.	GLASS-FILLED THERMOPLASTIC, 94V-0, BLACK	2-641600-5
	1	PHOS.BRZ.	GLASS-FILLED THERMOPLASTIC, 94V-0, BLACK	2-641600-4
SUPSD BY 390261-4	TINNED	PHOS.BRZ.	GLASS-FILLED THERMOPLASTIC, 94V-0, BLACK	2-641600-3
	2	BE.CU.	GLASS-FILLED THERMOPLASTIC, 94V-0, BLACK	2-641600-2
SUPSD BY 390261-4	TINNED	BE.CU.	GLASS-FILLED THERMOPLASTIC, 94V-0, BLACK	2-641600-1
	CONTACT FINISH	CONTACT MAT'L	HOUSING MATERIAL	PART NO.

THIS DRAWING IS A CONTROLLED DOCUMENT.

DIMENSIONS: INCHES

TOLERANCES UNLESS OTHERWISE SPECIFIED:
2 PLC ±-
3 PLC ±-
4 PLC ±-
5 PLC ±.005
ANGLE ±-
ANGLE ±0°30'

MATERIAL: SEE TABLE
FINISH: SEE TABLE

DWN J. CYRUS 8-17-87
CK R. MILLER 8-17-87
APVD J. LAMBERT 9-4-87
PRODUCT SPEC 108-1066
APPLICATION SPEC 114-1049
WEIGHT —

CUSTOMER DRAWING

AMP
AMP Incorporated
Harrisburg, PA 17105-3608

NAME: SOCKET ASSY, DIP, LADDER, 16 POS, DIPLOMATE™ DL

SIZE A1 | CAGE CODE 00779 | DRAWING NO C 641600 | RESTRICTED TO —

SCALE 5:1 | SHEET 1 OF 1 | REV AE

AMP 4805 REV 11.AMB7

25-SEP-01 08:17:54 amp81153 /home/amp81153/dbdecd/acc010481

Downloaded from Elcodis.com electronic components distributor