THIS DRAWING IS UNPUBLISHED. RELEASED FOR PUBLICATION -.-- .
© COPYRIGHT - - BY TYCO ELECTRONICS CORPORATION. ALL RIGHTS RESERVED.

UOC	DIST
AD	00

REVISIONS

P	LTR	DESCRIPTION	DATE	DRN	APVD
	A	ECO-05-013690	29DEC2005	RB	DR
	A1	REVISED PER ECO-09-024927	07NOV09	KK	AEG

1. RECEPTACLE ACCEPTS A .008–.014 THICK I.C. LEAD.
2. TUBE LOADED FOR AUTOMATIC INSERTION.
3. BECU CONTACT–PLATED WITH TWO .000030 MIN THK. GOLD STRIPES IN CONTACT AREA WITH TIN ON CONTACT LEGS, BALANCE OF CONTACT NICKEL PLATED.
4. PHOS. BRONZE CONTACT– PLATED WITH TWO .000015 MIN THK. GOLD STRIPES IN CONTACT AREA WITH TIN ON CONTACT LEGS, BALANCE OF CONTACT NICKEL PLATED.
5. MAXIMUM DIMENSION FOR I.C. SEATING PLANE.
6. HOUSING MATERIAL–GLASS FILLED THERMOPLASTIC, BLACK, 94V–0
7. OBSOLETE PARTS: OBSOLETE CIS STREAMLINING PER D.RENAUD/D.SINISI

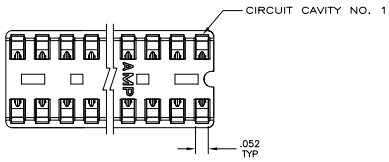

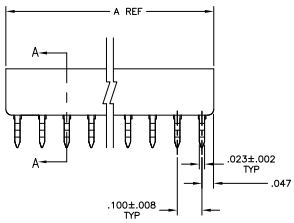

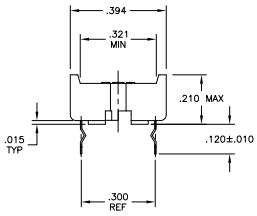

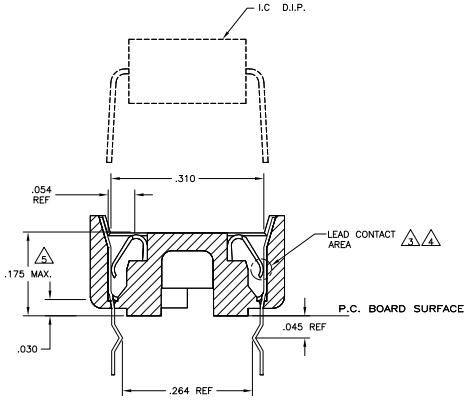

SECTION A–A
SCALE 10:1

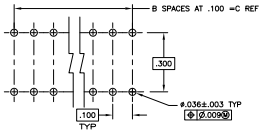

RECOMMENDED MOUNTING HOLE PATTERN
SCALE 4:1

	CONTACT & FINISH	DIM C	B SPCS	DIM A	POSITION	PART NO.
OBSOLETE 7	3	.900	9	.995	20	~~1–1825373–6~~
	3	.800	8	.895	18	~~1–1825373–5~~
	3	.700	7	.795	16	~~1–1825373–4~~
	3	.600	6	.695	14	~~1–1825373–3~~
	3	.300	3	.395	8	~~1–1825373–2~~
	3	.200	2	.295	6	~~1–1825373–1~~
	4	.900	9	.995	20	1825373–6
7 OBSOLETE	4	.800	8	.895	18	~~1825373–5~~
7 OBSOLETE	4	.700	7	.795	16	1825373–4
7 OBSOLETE	4	.600	6	.695	14	~~1825373–3~~
7 OBSOLETE	4	.300	3	.395	8	1825373–2
7 OBSOLETE	4	.200	2	.295	6	~~1825373–1~~

THIS DRAWING IS A CONTROLLED DOCUMENT.

DIMENSIONS: INCHES

TOLERANCE UNLESS OTHERWISE SPECIFIED:
6 PLC ± –
3 PLC ± –
2 PLC ± –
1 PLC ± –
4 PLC ± –
ANGLES ± –

MATERIAL –
FINISH –

DR R. BROWN 29DEC2005
CK D. ROHDE 29DEC2005
APVD D. ROHDE 29DEC2005
PRODUCT SPEC –
APPLICATION SPEC –
WEIGHT –

Tyco Electronics Corporation
Harrisburg, Pa 17105–3608

NAME DIP SOCKET ASSY, CLOSED, DIPLOMATE, RETENTIVE LEAD, .300 CL, LEAD FREE

SIZE A1 CAGE CODE 00779 DRAWING NO C–1825373 RESTRICTED TO –

CUSTOMER DRAWING SCALE 5:1 SHEET 1 OF 1 REV A1

AMP 4805 REV 31MR2000

29DEC05 2:15pm pu001193 H:\dmtmod\ECs\ecs05013690\1825373-c.dwg

Downloaded from Elcodis.com electronic components distributor