THIS DRAWING IS UNPUBLISHED. RELEASED FOR PUBLICATION: - -
© COPYRIGHT - BY TYCO ELECTRONICS CORPORATION. ALL RIGHTS RESERVED.

LOC	DIST
AD	0

REVISIONS

Y	LTR	DESCRIPTION	DATE	DRN	APVD
	AA	REV PER 0G3C-0214-00	30AUG00	BH	HW

1. RECEPTACLE ACCEPTS A .008–.014 THICK I.C. LEAD.
2. TUBE LOADED FOR AUTOMATIC INSERTION.
3. TWO .000030 MIN THK. GOLD STRIPES IN CONTACT AREA WITH TIN–LEAD (93/7) ON CONTACT LEGS, BALANCE OF CONTACT NICKEL PLATED.
4. TWO .000015 MIN THK. GOLD STRIPES IN CONTACT AREA WITH TIN–LEAD (93/7) ON CONTACT LEGS, BALANCE OF CONTACT NICKEL PLATED.
5. MAXIMUM DIMENSION FOR I.C. SEATING PLANE.

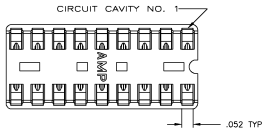

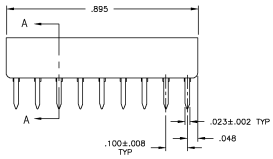

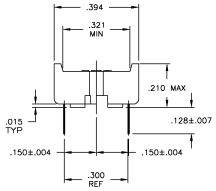

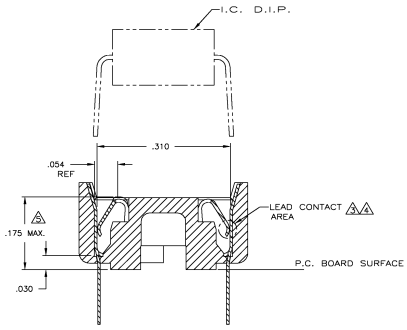

SECTION A–A
SCALE 10:1

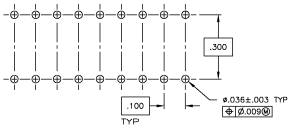

RECOMMENDED MOUNTING HOLE PATTERN
SCALE 4:1

	3	PHOS.BRZ. .005 THK	GLASS–FILLED THERMOPLASTIC, 94V–0, BLACK	2–640359–4
SUPSD BY 390261–5	TINNED	PHOS.BRZ. .005 THK	GLASS–FILLED THERMOPLASTIC, 94V–0, BLACK	2–640359–3
OBSOLETED	4	BE.CU. .005 THK	GLASS–FILLED THERMOPLASTIC, 94V–0, BLACK	2–640359–2
SUPSD BY 390261–5	TINNED	BE.CU. .005 THK	GLASS–FILLED THERMOPLASTIC, 94V–0, BLACK	2–640359–1
	CONTACT FINISH	CONTACT MAT'L	HOUSING MATERIAL	PART NO.

THIS DRAWING IS A CONTROLLED DOCUMENT.

DRN M.CITRIS 25 FEB 97
CHK R.MILLER 25 FEB 97
APVD J.LAMBERT 25 FEB 97

AMP Tyco Electronics Corporation Harrisburg, PA 17105

NAME SOCKET ASSY, DIP, 18 POS, DIPLOMATE DL

PRODUCT SPEC 108–1066
APPLICATION SPEC 114–1049

SIZE A1 CAGE CODE 00779 DRAWING NO 2–640359 RESTRICTED TO –

WEIGHT –

CUSTOMER DRAWING SCALE 4:1 SHEET 1 OF 1 REV AA

DIMENSIONS: INCHES
TOLERANCE UNLESS SPECIFIED: 0 PLC ± – ; 1 PLC ± – ; 2 PLC ± .005 ; 3 PLC ± – ; ANGLES ± – –
MATERIAL SEE TABLE
FINISH SEE TABLE

AMP 4805 REV 31MAR2000

21AUG00

Downloaded from Elcodis.com electronic components distributor